REPORT

Tonkin+Taylor

Haverstock Road Central Interceptor Connection Works

Land use consent for works in a floodplain and overland flow path

Prepared for
Watercare Services Limited
Prepared by
Tonkin & Taylor Ltd
Date
September 2021
Job Number
1015172.1800

Exceptional thinking together
www.tonkintaylor.co.nz

Document Control

Title: Haverstock Road Central Interceptor Connection Works					
Date	Version	Description	Prepared by:	Reviewed by:	Authorised by:
September 2021	1.0	Final for lodgement	L Alkamil	K Baverstock	P Roan

Distribution:

Watercare Services Limited	1 PDF copy
Tonkin & Taylor Ltd (FILE)	1 copy

Table of contents

1 Introduction 1
- 1.1 Background and overview of proposed works 1
- 1.2 Applicant and property details 2
- 1.3 Overview of resource consent requirements 3

2 Site description 4

3 Description of works 7
- 3.1 Consented CI works 7
- 3.2 This application 8
- 3.3 Existing management plans 9

4 Resource consent requirements 11
- 4.1 Auckland Unitary Plan 11
- 4.2 Permitted activities and existing resource consents 12

5 Assessment of effects on the environment 13
- 5.1 Positive effects 13
- 5.2 Flooding effects 13
- 5.3 Conclusion 15

6 Statutory assessment 16
- 6.1 RMA assessment 16
  - 6.1.1 Part 2 of the RMA 16
- 6.2 National Environmental Standards 16
  - 6.2.1 National Environmental Standards for Freshwater 2020 16
  - 6.2.2 National Environmental Standard for Assessing and Managing Contaminants in Soil to Protect Human Health 2011 16
- 6.3 National Policy Statements 16
- 6.4 Auckland Unitary Plan policy assessment 17
- 6.5 Landowner approvals 18
- 6.6 Non-notification assessment 18

7 Conclusion 19

8 Applicability 20

Appendix A : Record of Title

Appendix B : Drawings

Appendix C : Flood Risk Assessment

Appendix D: Easement Agreement

Appendix E: License Agreement Plan

1 Introduction

This Assessment of Effects on the Environment (AEE) report has been prepared on behalf of Watercare Services Limited (Watercare) to support a resource consent application to authorise wastewater infrastructure in a floodplain as part of the Central Inceptor (CI) project at Haverstock Road, Mt Albert. As described below, the CI works are authorised under a designation and regional and district resource consents. This resource consent application and AEE is therefore limited to an assessment of minor works in a floodplain which are located outside the existing designation.

This report has been prepared in fulfilment of section 88 of the Resource Management Act 1991 (RMA), and in accordance with Tonkin & Taylor Ltd's (T+T) letter of engagement dated 29 July 2021.

1.1 Background and overview of proposed works

The CI is a fundamental part of Watercare's long-term strategy to effectively manage wastewater within the Auckland region, to protect public health and the environment, and to provide for growth. The CI is a 14.7-kilometre long and 4.5-metre-wide tunnel that runs between Grey Lynn and the Māngere Wastewater Treatment Plant (MWTP), collecting and transferring wastewater for treatment and safe disposal. It will have permanent shafts for operational use and future access – these will collect and transfer wastewater from the existing network into the tunnel providing a more direct route to the MWTP.

The site at Haverstock Road is located along the main tunnel alignment for CI and is a secondary shaft within the northern section of the tunnel. It provides a connection to the existing Branch 8 sewer and will also be used as an inspection site for the CI Tunnel Boring Machine (TBM).

The site is designated by Watercare (ref. 9466) under the Auckland Unitary Plan Operative in Part (AUP) for the purpose of the construction, operation and maintenance of wastewater infrastructure[1]. In addition to this designation, existing regional and district resource consents authorise the wider site works associated with CI, including a range of permanent wastewater infrastructure, stormwater discharges, site establishment works and associated earthworks[2].

As part of the detailed design process, Watercare has identified works outside of its designation and within an identified floodplain and overland flow path. These works comprise the following:

- Overflow chamber (MH01) – (external ø6 m x ~3.6 m deep);
- Manhole 02 (MH02) – (external ø5 m x ~3.6 m deep), on the existing DN1600 stormwater line; and
- A connection pipe (2500 mm wide and 1500 mm high), which connects from MH02 to MH01 and MH01 to the main works.

These works are located approximately 50 m outside of Designation 9466 and are within a floodplain and overland flow path as identified in Auckland Council's GIS viewer. While the existing resource consents provide for these works at Haverstock Road, at the time of the CI application there were no rules in the Auckland Council Regional Plan: Air, Land and Water (ALW Plan) or Auckland Council District Plan (Isthmus Section) specifically in relation to works in flood plain areas. Therefore, this component of the works was not addressed as either a permitted activity or through a consent requirement at the time of the CI resource consent applications. The AUP subsequently included rules in relation to works in natural hazards areas, and Auckland Council has advised that a further

[1] Works in accordance with a designation do not require land use consent under section 9(3) of the Resource Management Act 1991 (RMA)

[2] R/LUC/2012/2846, R/LUC/2012/2846/1, PRC40962, PRC40963, 40834, 40835, 40836, 40837, 40838, 40839, 40840, 40841, 40842, 40843, 40844, 40845, 40846, 40848, 40849 and 40850

resource consent is required in accordance with the rules in Chapter E36 *'Natural hazards and flooding'* of the AUP due to the location of the works within a floodplain.

1.2 Applicant and property details

Table 1.1: Applicant and property details

Applicant	Watercare Services Ltd
Owner of application area / legal description / Record of Title reference	• Watercare Service Ltd (applies to part of the designated area of the site; almost all of the works are contained on this property including MH01 and part of MH02): Legal description: Section 1 SO 528085 Record of Title ref: 868508 • New Zealand Institute for Plant and Food Research Limited (applies to the adjoining land to the south and west of Watercare's designated CI site. The western extent of MH01 is located very marginally within/on the boundary of this land): Legal description: Section 2-3 SO 528085 Record of Title ref: 4931569 • Department of Conservation (DoC) (applies to the riparian strip to the north of the site. MH02 is mostly located within this land)[3]: Legal description: Section 1 SO 69377 Record of Title ref: Not applicable • Horticulture and Food Research Institute of New Zealand Ltd (applies to the strip to the far north of the site. MH02 is located partially (very marginally) within this land): Legal description: Lot 3 Deposited Plan 334046, Record of Title ref: 139490
Site address / map reference	118 Mt Albert Road, 10 Camden Road, 98-102 Haverstock Road
Site area	Designated area – 4,000 m^2 Watercare-owned property – 1,600 m^2 Approx. works area outside of designation – 250 m^2 (of which, approximately 20m^2 is located outside of the Watercare-owned property)
Council / Plans	Auckland Council Auckland Unitary Plan Operative in Part (AUP)
Address for service during consent processing	Tonkin + Taylor Ltd Attention: Karen Baverstock Phone: 09 359 2735 Email: KBaverstock@tonkintaylor.co.nz
Address for service during consent implementation and invoicing	Watercare Services Ltd Attention: Xenia Meier Phone: 021 574 585 Email: xenia.meier@water.co.nz

[3] Watercare has an easement agreement with DoC (concession ref. 86289-OTH) for the rights to drain water and sewage for the purpose of extending the CI scheme.

We attach copies of the relevant Record of Titles in Appendix A and drawings in Appendix B.

1.3 Overview of resource consent requirements

AC has advised that resource consent is required under Rule E36.4.1 (A56) of the AUP as a restricted discretionary activity for infrastructure in the 1 percent annual exceedance probability (AEP) floodplain and overland flow path that is not otherwise provided for as a permitted activity.

A lapse date of 7 years is sought. This is only slightly longer than the standard lapse date of 5-years and is sought to account for any construction delays (including Covid-19 related construction delays).

2 Site description

The works are located within the Plant and Food Research facility grounds which are accessed off Haverstock Road. To the north and east of the site is residential development, including properties owned by Kāinga Ora – Homes and Communities (see Figure 2.1). The site is zoned Business Park, with the access onto Haverstock Road zoned Residential Mixed Housing Urban under the AUP (see Figure 2.2). The works area (250m^2) that is the subject of this application, is located immediately to the north of the designation boundary and is contained, for the most part, within Watercare owned land (refer Table 1.1 above and Figures 2.2 and 3.1 below).

Along the northern boundary of the site, Meola Creek flows north through a 1600mm pipe and is classed in this section as a stormwater asset and managed by Auckland Council Healthy Waters. This narrow strip of land is zoned Open Space –Informal Recreation in the AUP.

Most of the site is located within an identified 1 per cent annual exceedance probability (AEP) floodplain. In addition, an overland flow path runs through the northern boundary of the site (see Figure 2.3).

As set out in the original application and AEE[4], there are no recorded archaeological or heritage sites within the construction area and there is little potential for discovery of unrecorded archaeological remains.

The site has been subject to various contamination studies[5], which have identified parts of the site as previously being used to test insecticides, pesticides, and fertilisers as part of horticultural studies. In any case, this matter is addressed through the existing resource consents and Contaminated Land Site Management Plan[6] prepared for the wider CI works and does not form part of this application (see Section 3.1 for further details).

[4] "*Central Interceptor Main Project Works: Resource Consent Applications and Assessment of Effects on the Environment*" prepared by Watercare Services Ltd, dated August 2012.
[5] "*Desk Study and Ground Contamination Assessment – Main Works Central Interceptor Project*", prepared by Tonkin + Taylor Ltd, dated July 2012.
[6] Contaminated Land Site Management Plan – CI Main Project Works, Doc No. GAJV-PLN-00026, Revision [2.0 Final], approved 30 April 2021.

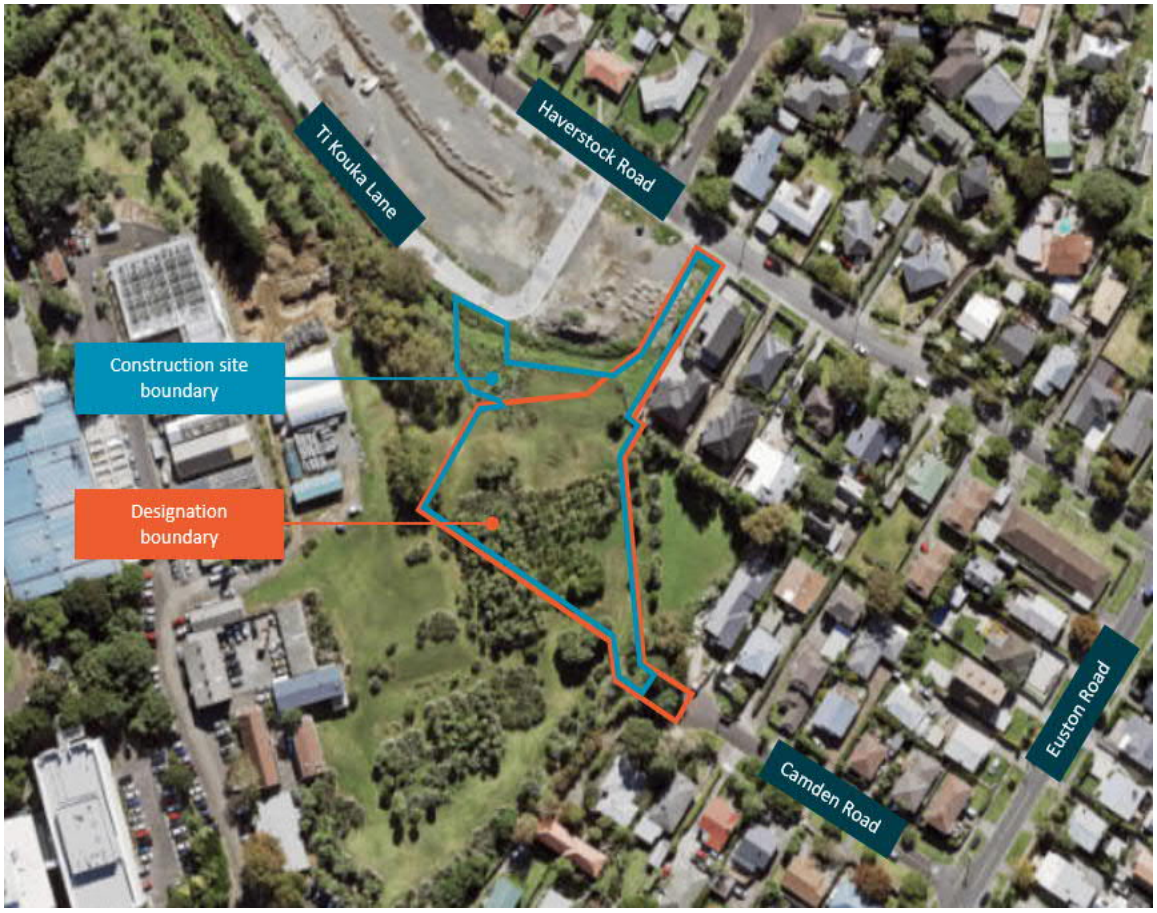

Figure 2.1 Site location plan, showing designation boundary (in orange) and construction site boundary (in blue). (Source: Watercare, 2021)

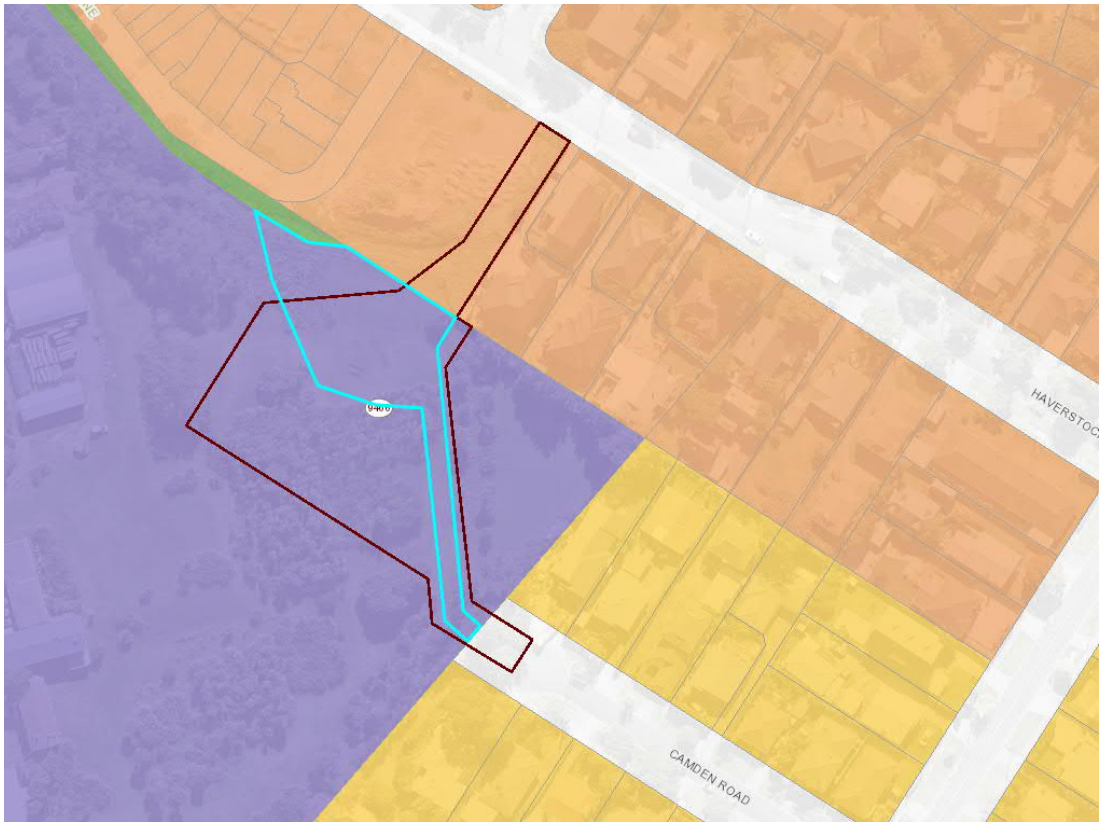

Figure 2.2: AUP zoning (Watercare's designation boundary shown in red and Watercare owned property shown in blue). (Source: Auckland Unitary Plan Viewer, 2021).

Figure 2.3: Haverstock Road overland flow paths and floodplain. (Source: Auckland Council GeoMaps, 2021).

3 Description of works

3.1 Consented CI works

The Haverstock shaft site is located along the main tunnel alignment for CI and is a secondary shaft within the northern section of the tunnel. The site provides a connection to the existing Branch 8 sewer and will enable the TBM to continue through to the Walmsley Park shaft site.

The works at Haverstock include site establishment works, shaft construction and surface works. This is programmed to take place over a 33-month period, from May 2022 to August 2025. The existing CI consents provide for a range of permanent structures at Haverstock, including the shaft, control chamber, manholes and connecting pipework.

A range of other associated activities at Haverstock are also provided for under the CI consents. This is summarised in Table 3.1 below.

On the basis of further design work, a small area of works at the Haverstock site is now located approximately 50 m outside of Designation 9466. However, in respect of district land use consents, the CI consents provide for the disturbance of contaminated land and earthworks beyond permitted activity levels on a project-wide basis (see Table 3.1 below).

As set out in Table 3.1 below, regional consents provide for CI-related activities on a project-wide basis, including those at the Haverstock Road site. In addition to these consents, works within a watercourse were a permitted activity under the ALW Plan and therefore no consent was required for this activity. However, works within a watercourse were included in the CI application and form part of the overall package of works that was provided for as part of the CI works at Haverstock.

Table 3.1: Consented activities at Haverstock

Activity	Consent Ref	RMA Ref	Geographic Extent
'District plan' land use consents			
Earthworks above permitted activity thresholds and on land subject to instability (district)	R/LUC/2012/2846	Section 9(3)	Project wide
Disturbance of contaminated sites	R/LUC/2012/2846/1 and PRC40963	NES Soil Reg 11	Project wide
'Regional' consents			
Earthworks above permitted activity levels (regional)	40834	Section 9(2)	Project wide
Emergency overflow – CI Catchment Network - Comprehensive Network Discharge Permit	R/REG/2013/3763	Section 15	Project wide
Taking/diverting groundwater due to construction and dewatering	40836	Section 14	Project wide
Stormwater discharge from construction works	40841	Section 15	Project wide

Activity	Consent Ref	RMA Ref	Geographic Extent
Stormwater discharge from permanent works (impervious surface over 1000m^2)	40838	Section 15	Specifically applies to Haverstock
Discharge of contaminants into or onto land or water (from construction related activities e.g., tunnel dewatering, wheel wash, etc).	40845	Section 15	Project wide
Disturbance of contaminated sites (regional)	40843	Section 15	Project wide

3.2 This application

For the purpose of this application, the works which require resource consent are limited to two manholes (MH01 and MH02) and connection pipework within the 1% AEP floodplain and overland flow paths (see Figure 3.1 below).

As outlined in Section 3.1, all other site works are authorised under Watercare's existing designation and resource consents and hence this application relates to works within the floodplain and overland flow path only.

Works on this site are expected to start in May 2022 and reinstatement in August 2025. The operating hours for establishment, shaft construction and surface works will be a six-day work pattern with normal operating hours of 0700-1800 Monday – Friday and 0800-1800 Saturday, as provided under existing CI consent conditions.

The construction of the structures is expected to involve the following:

- Site established and services will be located;
- To build the two manholes, topsoil of approximately 120m^2 and 600m^3 will be stripped to allow establishment of the working area;
- Geotextile and metals will be laid for the working platform;
- Trenches to the depth of manholes (3.6m) will be excavated and pipes laid. Manholes will be precast in situ;
- Install formwork, place reinforcement and pour concrete for the slabs of the two manholes;
- In the trenches, place precast pipes between manholes;
- Install formwork, place reinforcement and pour concrete for the walls and covers of the two manholes;
- Backfill around manholes and pipes with appropriate materials; and
- Site reinstated with grass and Surepave.

The manholes will have external diameters of 6 -5 m, at a depth of approximately 3.6 m[7]. There will be two manhole access hatches with lids approximately 600mm in external diameter.

As designed, the final lid level for MH01 is approximately 200mm above existing ground level. However, recent survey data indicates that this manhole will be completely below ground. This will be confirmed during construction.

[7] Note that design may change (+/- 20%) once construction commences due to unexpected ground conditions or to accommodate other underground services.

MH02 will be located within, and for the most part, beneath the base of the existing swale. There is a loss of 0.5m^2 in cross section area in the swale due to the construction of MH02. However, when reinstating the site, the swale will be made slightly wider at MH02 to ensure there is no reduction in the cross-section area.

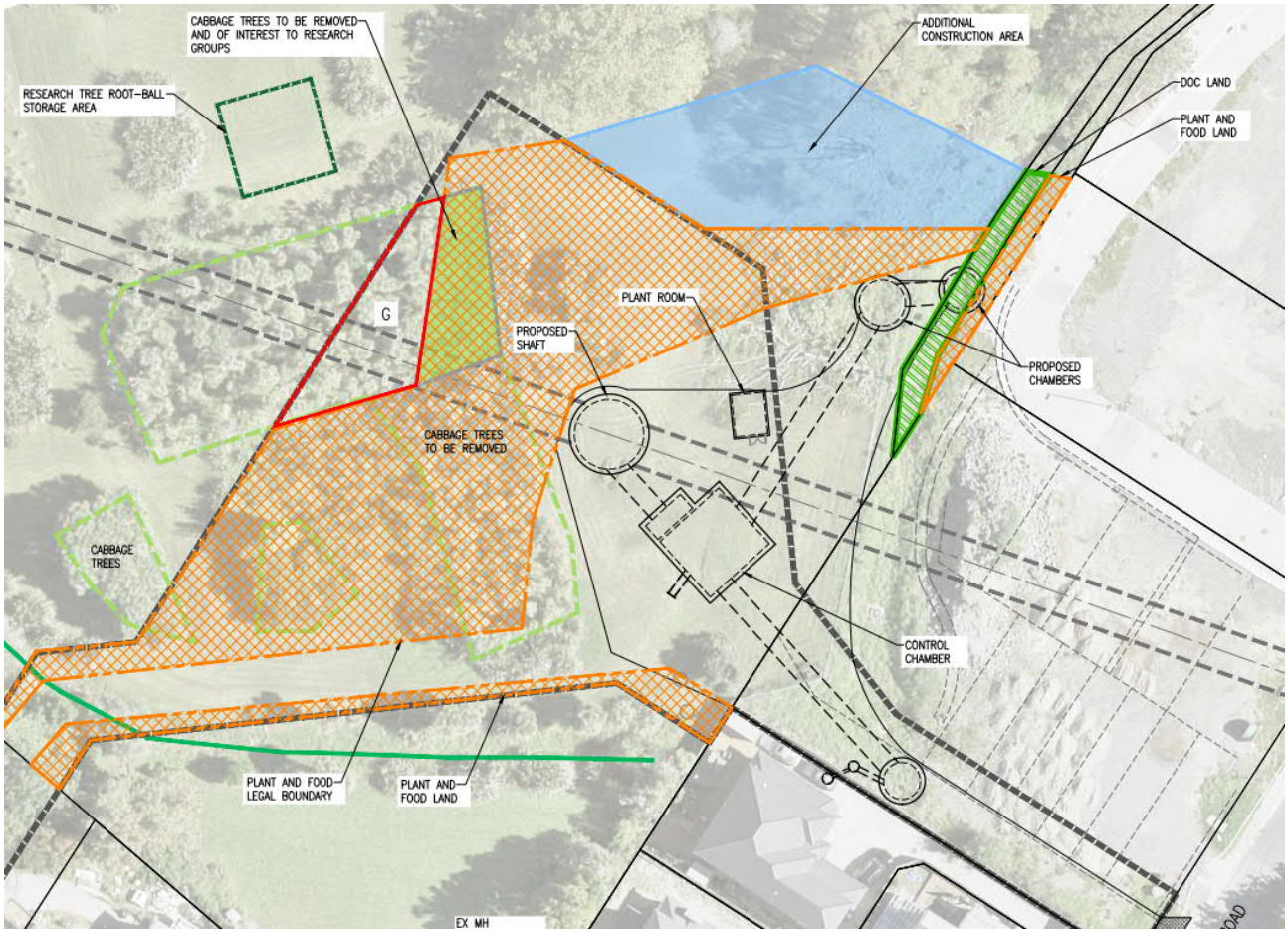

Figure 3.1: Proposed site works showing proposed infrastructure (Source: Watercare, 2021).

3.3 Existing management plans

CI is being undertaken in accordance with a suite of approved management plans and mitigation measures. The connection works at Haverstock will be undertaken in accordance with the applicable management plans for CI. This includes (but is not limited to) the following management plans:

- Construction Management Plan (CMP) (Doc No. GAVJV-PLN-00017, Version 2.3 Final, approved 6 May 2020);
- Construction Noise and Vibration Management Plan (Pump Station 23, Pump Station 25, Haverstock Road, Lyon Avenue, Mount Albert War Memorial Reserve, Norgrove Avenue, Rawalpindi Reserve and Western Springs) (CNVMP) (Doc No. GAJV-PLN-00099, Version 0.4 Final, approved 5 March 2020);
- Construction Traffic Management Plan (CTMP)(Doc No. GAJV-PLN-00129, Version 0.4 Final, approved 11 December 2019); and
- Contaminated Land Site Management Plan – Main Project Works (CLSMP) (Doc No. GAJV-PLN-00026, Revision 2.0 Final, approved 30 April 2021).

In addition to these plans, there is a Site-Specific Erosion and Sediment Control Plan (SSESCP) which specifically provides for these works at Haverstock[8]. As per the CI consent conditions[9], there will also be a Groundwater and Settlement Monitoring and Contingency Plan for the CI Haverstock shaft site which will be prepared prior to the commencement of works.

In relation to traffic and access associated with these works, Watercare's designation provides for site access along Haverstock Road onto Sandringham Road (as well as Camden Road, although this is not proposed to be used). A Construction Traffic Management Plan has been prepared and approved by Auckland Council, noting there are no proposed changes to traffic movements or site access as a result of these connection works.

Watercare's designation also provides for construction noise and vibration effects associated with the CI works. The Construction Noise and Vibration Management Plan specifically provides for sheet piling for manholes as well as shaft and chamber construction at the site, noting this management plan has already been approved for these connection works.

The approved management plans include a range of mitigation measures to potential adverse effects. The works described in this application will be undertaken in accordance with these management plans, noting that the SSESCP and approved CNVMP already provides for the works at Haverstock including the works described in Section 3.2 of this application. By relying on the existing management plans, this allows for an integrated and consistent approach to be taken, while also acknowledging that these management plans are subject to review and approval by Auckland Council and are demonstrated to have worked across the course of the wider CI works.

[8] The SSESCP is pending further information before being granted approval by Auckland Council. No queries raised on the SSESCP are in relation to the earthworks proposed outside of Watercare's designation, but rather relates to overland flow paths and stormwater flows.
[9] Condition 4.6 of Consent 40836.

4 Resource consent requirements

4.1 Auckland Unitary Plan

The requirements for resource consents are determined by the rules in the AUP. The rules which apply are determined by the zoning of the site, any identified notations in the plan and the nature of the activities proposed. Zoning and planning notations which apply to the works area are set out in Table 4.1 and resource consent requirements are identified in Table 4.2 below.

Table 4.1: Zoning and planning notations

Zoning/planning limitation	Comment as it applies to the MH01 and MH02 works area
Open Space –Informal Recreation Zone	Applies to a riparian strip along the north-western section of the works area.
Business – Business Park Zone	Applies across most of the works' area.
Designation 9466 – Construction, operation and maintenance of wastewater infrastructure, Watercare	This designation applies to the adjacent main Haverstock CI construction area.
1 per cent annual exceedance probability (AEP) floodplain	Indicates areas predicted to be covered by flood water as a result of a rainstorm event of a scale that occurs on average once every hundred years. Applies across the works area.
Overland flow path	Intercepts Meola Creek to the east.
Business Park Zone Office Control	Applies across most of the works' area. There are no rules under this control which are applicable to this application.
Quality Sensitive Aquifer Management Overlay	Identifies areas containing shallow and unconfined aquifers. Applies to the southern-western corner of the designation boundary only. No works are proposed within the extent of this overlay.

Table 4.2: Resource consents required

Proposed activity	Rule reference / description	Comment	Activity status
Construction of wastewater infrastructure within a floodplain and overland flow path	Infrastructure in the 1 per cent AEP floodplain and overland flow path Rule E36.4.1 (A56) – All other infrastructure in areas listed in heading above not otherwise provided for.	The proposed manholes exceed the 10% increase in width and height of the consented manhole and therefore exceed permitted activity standard E36.6.1.13(i).	Restricted discretionary

Under Rule E36.8.1 (18) AC has restricted its discretion. These matters of discretion are addressed in Section 5 of this report.

AC has advised that consent is required as the manholes exceed the permitted activity threshold for the upgrading of infrastructure (i.e. a 10% increase in size).

It is also relevant to note that Rules E36.4.1 (A34) and (A35) of Chapter E36 of the AUP provide for a range of activities and structures located within a 1 percent annual exceedance probability (AEP) floodplain as permitted activities well beyond what is proposed in this application. This includes fences and walls (A23), private roads and accessways (A27), and new buildings and structures with a gross floor area of up to 10m^2 (A34) or for flood tolerant activities up to 100m^2 (A35).

The consent requirement triggered for these proposed works is not a reflection of actual or potential effects (which are negligible – refer to Section 5), but rather a consequence of plan drafting and interpretation in that the activity is not specifically provided for in the plan provisions.

4.2 Permitted activities and existing resource consents

Chapter E26 of the AUP establishes a broad range of permitted activities in relation to infrastructure including underground pipelines (A49), outfalls and ancillary structures (A56), drop shafts and manholes (A57) and associated earthworks (dp – (A94), (A95) and (A96) and pry (A100) and (A105)).

Notwithstanding these permitted activities, district plan-related earthworks outside of the existing designation are already provided for under the existing CI consents as follows:

- District-plan earthworks beyond permitted activity levels (consent ref. PRC40962); and
- Disturbance of contaminated sites under Regulation 11 of the NES Soil (consent ref. R/LUC/2012/2846/1 and PRC40963)

The regional-plan related activities are also provided for under the existing CI consents as set out in Section 3.1 and summarised below:

- Groundwater takes and/or diversion (consent ref. 40836);
- 'Regional' earthworks above permitted levels (all surface construction sites) (consent ref. 40834);
- Disturbance of contaminated sites (consent ref. 40843); and
- Engineered Overflow Point (EOP) discharge under the CI-NDC (consent ref. R/REG/2013/3763).

The existing designation and regional and district consents already authorise the works associated with CI. This includes wastewater infrastructure at the Haverstock CI site, as well as traffic management and the establishment of site construction areas and associated earthworks. Therefore, the proposed works are already provided for under the existing regional and district consents. The consent requirement advised by AC is therefore limited specifically to the location of the two manholes within a floodplain and overland flow path.

As noted in Section 3.1 above, works within a watercourse were a permitted activity under the ALW Plan at time the CI consents were issued and therefore no consent was required for this activity. However, works within a watercourse were included in the CI application and form part of the overall package of works that was provided for as part of the CI works at Haverstock[10].

[10] We note the permitted activity standards in the AUP reflect the previous ALW standards and the proposed outfall structure would remain a permitted activity under Rule E3.4.1 (A39) – Stormwater or wastewater outfall complying with standards E3.6.1.14.

5 Assessment of effects on the environment

The following assessment identifies and assesses the types of effects that may arise from the proposed works. This assessment also outlines the measures that the applicant proposes to avoid, remedy or mitigate any potential adverse effects on the environment.

As set out in Section 3.2, the scope of this application is limited to the construction of two manholes and connection pipework within a floodplain and overland flow path. This is reflected in the assessment set out below.

5.1 Positive effects

The proposed works contribute to the wider CI project, which has significant numerous positive effects. These include providing network capacity for growth and development, addressing asset risk due to the ageing Western Interceptor and reducing overflows to the stream environment in the catchment it serves.

The CI main works will be integral to the ongoing operation of the wastewater network in Auckland over the next 50 years and beyond. The wastewater network enables the communities of Auckland to provide for their ongoing health and wellbeing and for continued economic growth and development across Auckland. The wastewater network is fundamental to the health and operation of Auckland.

5.2 Flooding effects

Under Rule E36.8.1 (18) of the AUP, AC has restricted its discretion to the matters assessed in Table 5.1 below. For further details regarding flood risk, refer to the Flood Risk Assessment in Appendix C.

Table 5.1: Assessment against matters of discretion

Matters of discretion		Assessment
a	the functional and/or operational need to locate within the hazard area	There is a functional and operational need for the manholes to be located within a floodplain and overland flow path to connect to the existing and future (CI) wastewater network.
b i	the risk of adverse effects to other people, property and the environment including all of the following: risk to public health and safety;	The existing hazard and risk of public health and safety will reduce with the construction of the CI main tunnel, which will help reduce flooding risk within the catchment.
ii	impacts on landscape values and public access associated with the proposed activity including a need for hard protection structures to be required to protect the utility from the natural hazard;	The proposed works are not located within any notable landscapes or in proximity to any notable landscape features. There are no effects on landscape values. Public access arrangements will not be affected by the proposed works.
iii	the management or regulation of other people and property required to mitigate natural hazard risks resulting from the location of the infrastructure;	The existing hazards will reduce with the construction of the CI main tunnel as flooding will reduce. MH01 will be buried completely underground. MH02 will be buried mostly underground, with a scruffy dome which will assist with conveying overland flow into the existing DN1600 stormwater pipe. The proposed works will

		have positive effects in terms of flood risk and therefore no management or regulation of other people or property is required to mitigate natural hazard risk.
iv	the storage or use of hazardous substances in relation to the activity;	Not applicable – storage of hazardous substances will not occur.
v	any exacerbation of an existing natural hazard or creation of a new natural hazard as a result of the structure;	The works proposed are very minor in nature and will involve the construction of manholes and connection pipework. All infrastructure is buried below ground except MH02. MH02 will cause the existing swale base to rise slightly before dropping back down to existing ground level. There will be no exacerbation of an existing natural hazard and flood risk is expected to decrease at the site as a consequence of the construction of the CI main tunnel.
vi	the use of non-structural solutions instead of hard engineering solutions; and	Not applicable to the proposed works.
vii	the ability to relocate or remove structures	The manholes are required as part of wider CI works. It cannot be relocated as it is required to connect to existing wastewater infrastructure.

Table 5.2 contains an assessment of the proposed works against the relevant assessment criteria contained in the AUP.

Table 5.2: Assessment criteria

Relevant Criteria		Assessment
Rule E36.8.2 (17) – for the operation, maintenance, renewal, repair and minor infrastructure upgrading of infrastructure in the coastal erosion hazard area; or in the coastal storm inundation 1 percent annual exceedance probability (AEP) area; or in the coastal storm inundation 1 percent annual exceedance probability (AEP) plus 1m sea level rise area; or in the 1 percent annual exceedance probability (AEP) floodplain; or in overland flow paths; or on land which may be subject to land instability:		
a	the long-term management, maintenance and monitoring of any mechanisms associated with managing the risk of adverse effects resulting from the placement of infrastructure within a hazard area to other people, property and the environment including the management of hazardous substances;	The very minor nature of the works means that no particular long-term management or monitoring is required beyond Watercare's standard procedures. In the main, the manholes will be underground. There will be no storage of hazardous substances.

Relevant Criteria		Assessment
b	the extent to which residual risks to people, property and the environment resulting from any mitigation measures implemented to manage the hazard;	There are no residual risks associated with a natural hazard.
c	the extent to which an existing hazard is exacerbated or a new hazard is created as a result of the structure;	All infrastructure is buried below ground except MH02. MH02 will cause the existing swale base to rise slightly before dropping back down to existing ground level. The flood level, flows, velocities and overland flow path routes will not change as a consequence of constructing the manholes and connection pipework and hence there where be no exacerbation of existing flood risk. Overall, flood risk is expected to decrease as a consequence of the construction of the CI main tunnel.
d	the extent to which the proposal includes non-structural solutions to protect infrastructure from the hazard and resulting adverse effects; and	Not applicable to this application.
e	the extent to which landscape values and/ or public access are affected by the proposed structure or structures associated with the mitigation of the hazard.	The proposed works are not located within any notable landscapes or in proximity to any notable landscape features. There are no anticipated adverse effects on landscape values. Public access will be unaffected as the works area is located on private property.

As discussed above and in the Flood Risk Assessment (Appendix C), MH01 is buried below ground, with the lid of MH02 located marginally above ground to provide a scruffy dome to assist with conveying overland flow into the existing DN1600 stormwater pipe. Overall, the proposed works will reduce the risk of flood risk with the construction of the CI main tunnel.

5.3 Conclusion

As is typical in relation to wastewater infrastructure, Watercare has considered the natural hazard (floodplain and overland flow path) in the design of the manholes. Watercare considers that the hazard will have no impact on the resilience of the infrastructure.

As discussed above, the structures themselves will have no effect on flood risk, the proposed works will reduce flood risk with the construction of the CI main tunnel, and more broadly will have significant positive effects in relation to improving wastewater infrastructure in Auckland as part of the wider CI project.

6 Statutory assessment

6.1 RMA assessment

Section 104 of the RMA sets out the matters to which a consent authority must have regard to, subject to Part 2 of the RMA, when considering an application for resource consent. These include:

- Any actual and potential effects on the environment of allowing the activity (refer Section 5 above);
- Any relevant provisions of:
  - a national environmental standard or national policy statement;
  - the AUP; and
- Any other matter the consent authority considers relevant and reasonably necessary to determine the application.

6.1.1 Part 2 of the RMA

Part 2 of the RMA sets out the purpose and principles of the Act. The purpose of the RMA is to promote the sustainable management of natural and physical resources. The AUP has been prepared recently and is clear and directive, and clearly deals with Part 2 subject matter such that recourse to Part 2 is not likely to add anything to the assessment.

6.2 National Environmental Standards

6.2.1 National Environmental Standards for Freshwater 2020

The Resource Management (National Environmental Standards for Freshwater) Regulations 2020 (NES-FW) regulates activities that pose risks to the health of freshwater and freshwater ecosystems. The standards apply to activities in relation to farming activities, natural wetlands, instream structures and the reclamation of rivers.

As discussed in Section 3.1, resource consent was granted for the proposed works at the Haverstock site which included the instream structures as part of the CI consent. Section 43B(6) RMA therefore applies, in which the existing CI consent prevails over the regulations of the NES-FW. On that basis, there are no applicable standards relevant to this application.

6.2.2 National Environmental Standard for Assessing and Managing Contaminants in Soil to Protect Human Health 2011

As discussed in Section 3.1, the requirements of the NES Soil have previously been addressed through the CI resource consents and associated conditions.

6.3 National Policy Statements

The National Policy Statement for Freshwater Management 2020 (NPS-FM) provides guidance on how freshwater is to be managed in a manner that gives effect to Te Mana o te Wai.

As discussed in Section 5, the proposed works will contribute to the wider CI project, which will include positive effects such as reducing overflows to the stream environment. The proposed works are considered consistent with the overall objective of the NPS-FM, in terms of providing firstly for the health of freshwater ecosystems as well as the social, economic and cultural well-being of communities.

6.4 Auckland Unitary Plan policy assessment

An assessment against key relevant objectives and policies of the AUP is set out in Table 6.1 below.

Table 6.1: Objectives and policies assessment

Reference	Comment
Chapter B3 – Infrastructure, transport and energy	
B3.2.1 Objective (2) The benefits of infrastructure are recognised, including: a Providing essential services for the functioning of communities, businesses and industries within and beyond Auckland; ..... d Providing for public health, safety and the well-being of people and communities	The proposed works will contribute to the wider CI project – regionally significant infrastructure which will directly support the social, economic, environmental and cultural wellbeing of communities within Auckland.
B3.2.2 Policy (1) – Enable the efficient development, operation, maintenance and upgrading of infrastructure	The proposed works are required in order to provide manholes as part of the CI wastewater infrastructure upgrade.
B3.2.2 Policy (9) – Ensure where there is a functional or operational need for infrastructure to be located in areas subject to natural hazards: .... b That risk that cannot be avoided by location or design should be mitigated to the extent possible	The proposed works have a functional and operational need to be located in a floodplain and overland flow path in order to connect to existing wastewater infrastructure. As discussed in Section 5, existing hazards will reduce with the construction of the CI main tunnel as flooding will reduce.
Chapter E26 – Infrastructure	
E26.2.1 Objective (4) – Development, operation, maintenance, repair, replacement, renewal, upgrading and removal of infrastructure is enabled.	The proposed works are required in order to provide for wastewater infrastructure (specifically manholes and connection pipework).
E26.2.1 Policy (2) – Provide for the development, operation, maintenance, repair, upgrade and removal of infrastructure throughout Auckland by recognising: a Functional and operational needs; b Location, route and design needs and constraints; c The complexity and interconnectedness of infrastructure services; d The benefits of infrastructure to communities within Auckland and beyond.	The proposed works have a functional and operational need to be located in a floodplain and overland flow path in order to connect to the wastewater network. The proposed works contribute to the wider CI project, which will have numerous benefits in terms of providing an improved wastewater network for the communities within Auckland.
Chapter E36 – Natural hazards and flooding	
E36.2 Objective (4) - Where infrastructure has a functional or operational need to locate in a natural hazard area, the risk of adverse effects to other people, property, and the environment shall be assessed and significant adverse effects are sought first to be avoided or, if avoidance is not able to be totally achieved, the residual effects are otherwise mitigated to the extent practicable.	The proposed works have a functional and operational need to be located in a floodplain and overland flow path, due to the location of the existing infrastructure. Overall, flood risk is expected to reduce with the construction of the CI main tunnel.

6.5 Landowner approvals

Watercare has an easement agreement with DoC, giving them the rights to drain water and sewage for the purposes of extending the CI network (refer to Appendix D).

Watercare also has a license agreement with the New Zealand Institute for Plant and Food Research Limited for the purposes of CI (see the licence area map in Appendix E).

For the purpose of this application, the works requiring resource consent are limited to two manholes and connection pipework within a floodplain and overland flow path. The works are of a minor nature and on that basis, no further consultation is considered necessary.

6.6 Non-notification assessment

Section 95A of the RMA is relevant when a consent authority is considering whether a consent application should be considered with or without public notification.

Section 95A identifies a four-step process. In relation to these steps we note the following:

- The applicant does not request public notification of the application;
- There is no rule or national environmental standard that precludes or requires public notification of this application;
- An assessment of effects on the environment is provided in Section 5 of this AEE report. This assessment concludes that the adverse effects on the environment are less than minor; and
- No special circumstances are considered to exist in relation to the application.

Based on this assessment, we consider that this proposal meets the tests of the RMA to be processed without public notification.

For applications that are not publicly notified, under section 95B, the consent authority must determine whether to give limited notification of an application to any affected parties. Section 95B identifies a four-step process. In relation to these steps we note the following:

- The application does not need to be notified to any parties under section 95B(4). The proposed change will not affect any customary rights;
- The proposed activity is not on or adjacent to, or does not affect, land that is the subject of a statutory acknowledgement;
- There are no applicable rules or national environmental standards precluding limited notification; and
- No special circumstances are considered to exist that warrant limited notification.

In terms of section 95E(1), the application is limited to the placement of two manholes and an overflow pipe within a floodplain and overland flow path. These structures are a very minor component of the wider CI project which was publicly notified. The physical works, including earthworks outside of designation 9466, are already provided for under district and regional consents. As the proposed manholes are largely underground (with the exception of the lid of MH02), there are no flooding related effects. More broadly the works will reduce flood risk due to the additional capacity associated with the construction of the CI main tunnel. On this basis, there are no adversely affected parties.

No person is considered to be adversely affected by the application and the proposal therefore meets the tests of the RMA to be processed without limited notification.

Following the steps set out in sections 95A and 95B, we consider that the application should be processed without public or limited notification.

7 Conclusion

This AEE report has been prepared on behalf of Watercare Services Ltd to accompany a resource consent application to AC to authorise wastewater infrastructure in a floodplain and overflow path under Rule E36.4.1 (A56) of AUP.

As discussed in Section 3.1, the existing designation and regional and district consents already authorise the works associated with CI. This includes wastewater infrastructure at the Haverstock shaft construction site as well as traffic management and the establishment of site construction areas and associated earthworks. Therefore, the proposed works are already provided for under the existing regional and district consents with the exception of the works in a natural hazard area as advised by Auckland Council.

The works which are the subject of this application are very minor in nature and the scope of this application is limited only to the placement of two manholes and connection pipework within a floodplain and overland flow path. The structure themselves will have no effects in terms of flood risk, and the CI works at the site more broadly will have positive effects both on water quality as well as on flood risk. The works are therefore consistent with the relevant objectives and policies of the AUP.

Accordingly, we consider that this resource consent application should be granted on a non-notified basis, subject to fair and reasonable conditions.

8 Applicability

This report has been prepared for the exclusive use of our client Watercare Services Limited, with respect to the particular brief given to us and it may not be relied upon in other contexts or for any other purpose, or by any person other than our client, without our prior written agreement.

We understand and agree that this report will be submitted to Auckland Council in support of an application for resource consent for the works described herein, and that Auckland Council will rely on this report for the purpose of assessing that application.

Tonkin & Taylor Ltd

Environmental and Engineering Consultants

Report prepared by:	Authorised for Tonkin & Taylor Ltd by:
.....	.....
Laila Alkamil Planner	Peter Roan Project Director

24-Sep-21

\\ttgroup.local\files\aklprojects\1015172\1015172.1800 - haverstock\issueddocuments\20210924_haverstock aee_final.docx

Appendix A: Record of Title

RECORD OF TITLE
UNDER LAND TRANSFER ACT 2017
FREEHOLD
Search Copy

R.W. Muir
Registrar-General
of Land

Identifier	**139490**
Land Registration District	**North Auckland**
Date Issued	25 October 2005

Prior References
NA132D/77

Estate	Fee Simple
Area	241 square metres more or less
Legal Description	Lot 3 Deposited Plan 334046

Registered Owners
Horticulture and Food Research Institute of New Zealand Limited

Interests

Subject to Part IV A Conservation Act 1987

Subject to Section 11 Crown Minerals Act 1991

Appurtenant hereto is a water right created by Transfer 655655 (affects part Lot 3 DP 334046 formerly contained in CT 1656/6)

Appurtenant to part hereto are rights of way and drainage rights specified in Easement Certificate C558939.5 - 19.1.1994 at 2.23 pm

C558939.9 CAVEAT BY HER MAJESTY THE QUEEN - 19.1.1994 AT 2.23 PM

LT 334046 (Title Plan)
Cgn = 01103_Pgs = 002,18/05/04,11:15
Doc 2: 317439912

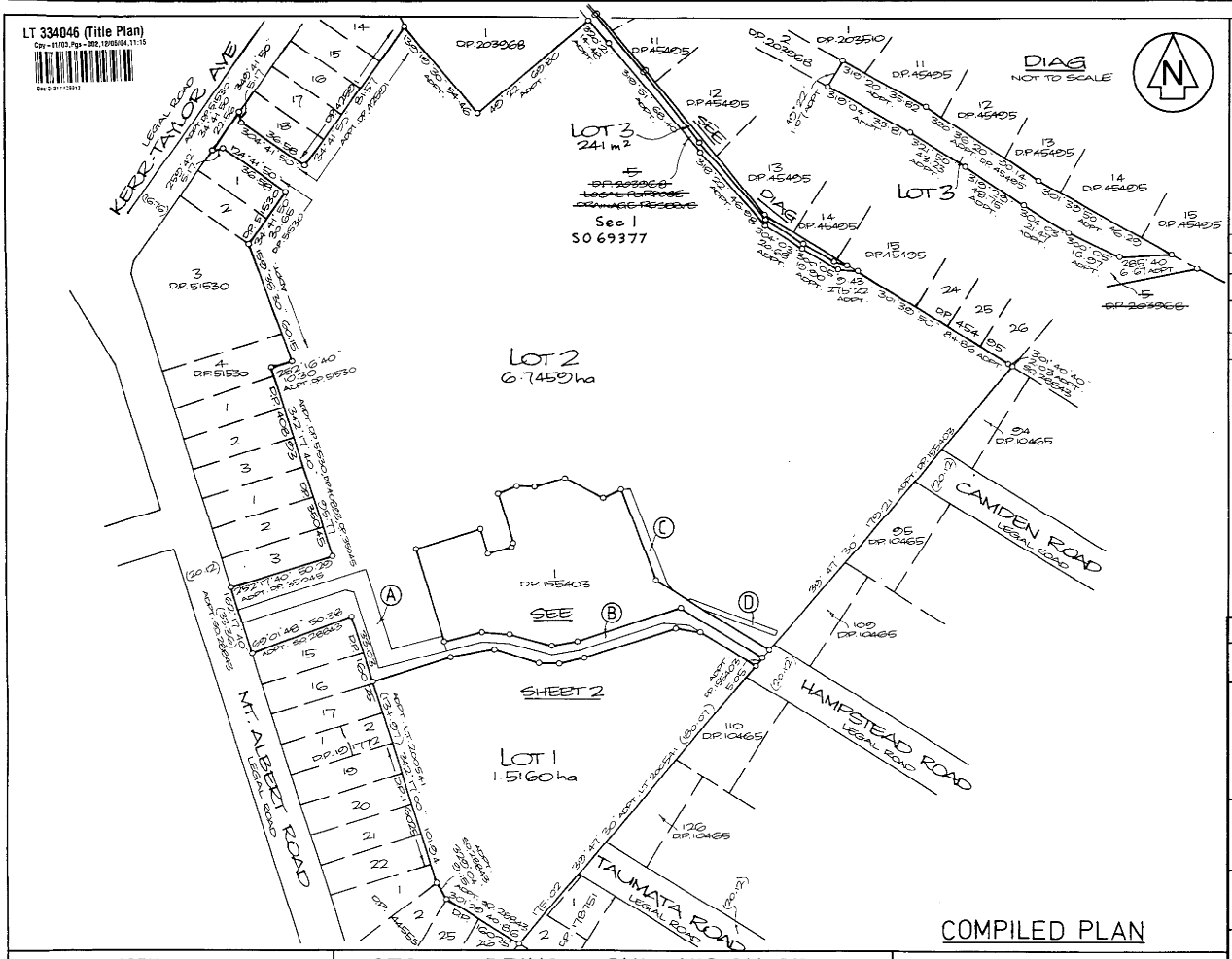

COMPILED PLAN

Approvals

EXEMPT FROM THE PROVISIONS OF PART X OF THE RESOURCE MANAGEMENT ACT 1991 LAND TO BE DISPOSED OF UNDER THE PUBLIC WORKS ACT 1981 EXEMPT BY SECTION 11(1)(b) RESOURCE MANAGEMENT ACT 1991

DATED THIS 8th DAY OF March 2004

T.L. SUBDIVISIONS
AUCKLAND CITY COUNCIL

EXISTING EASEMENTS		
PURPOSE	SHOWN	CREATED BY
RIGHT OF WAY	A C	C.558030.5 (EAS. CERT)
RIGHT OF WAY AND DRAINAGE	B	C.558030.6
DRAINAGE	D	C.558030.7

DATUM: GEODETIC 1949

ALL ADOPTIONS ARE FROM D.P. 203968 UNLESS OTHERWISE STATED

Sheet 1 of 2

CLASS OF SURVEY: I

NEW C'ST. ALLOCATED
LOT 1: 130488 LOT 3: 130490
LOT 2: 130489

Total Area 8.2860ha

Comprised in C.T. NA132D/77

I ROBERT KEITH ANDERSON OF MT. EDEN being a person entitled to practise as a registered surveyor certify that:
(a) The surveys to which this dataset relates are accurate, and were undertaken by me or under my direction in accordance with the Survey Act 1986 and the Survey Regulations 1998.
(b) This dataset is accurate and has been created in accordance with that Act and those Regulations.

Signed [signature] Date 1 3 2004

Field Book ____ p. ____ Traverse Book ____ p. ____
Reference Plans SO 28643, DP 350145, DP 406053
DP 425821, DP 454185, DP 415320, DP 155403, DP 313466, L.T. 200541
Examined ____ Correct ____

Approved as to Survey by Land Information NZ on
6/10/2005
~~Chief Surveyor~~

Deposited by Land Information NZ on
25/10/2005
~~Registrar General of Land~~

File Received Instructions 12 MAY 2004

D.P. 334046

LAND DISTRICT NORTH AUCKLAND
Survey Blk. & Dist. IV TITIRANGI
NZMS 261 Sheet ____ Record Map No. ____

LOTS 1-3 BEING A SUBDIVISION OF LOTS 3 & 4 D.P. 203968

TERRITORIAL AUTHORITY AUCKLAND CITY
Surveyed by R.K. ANDERSON CONSULTANTS
Scale 1: 1250 Date FEBRUARY 2004

A.L. BOWN, SURVEYOR GENERAL, LAND INFORMATION, NEW ZEALAND

*APPROVED AKL 28 05

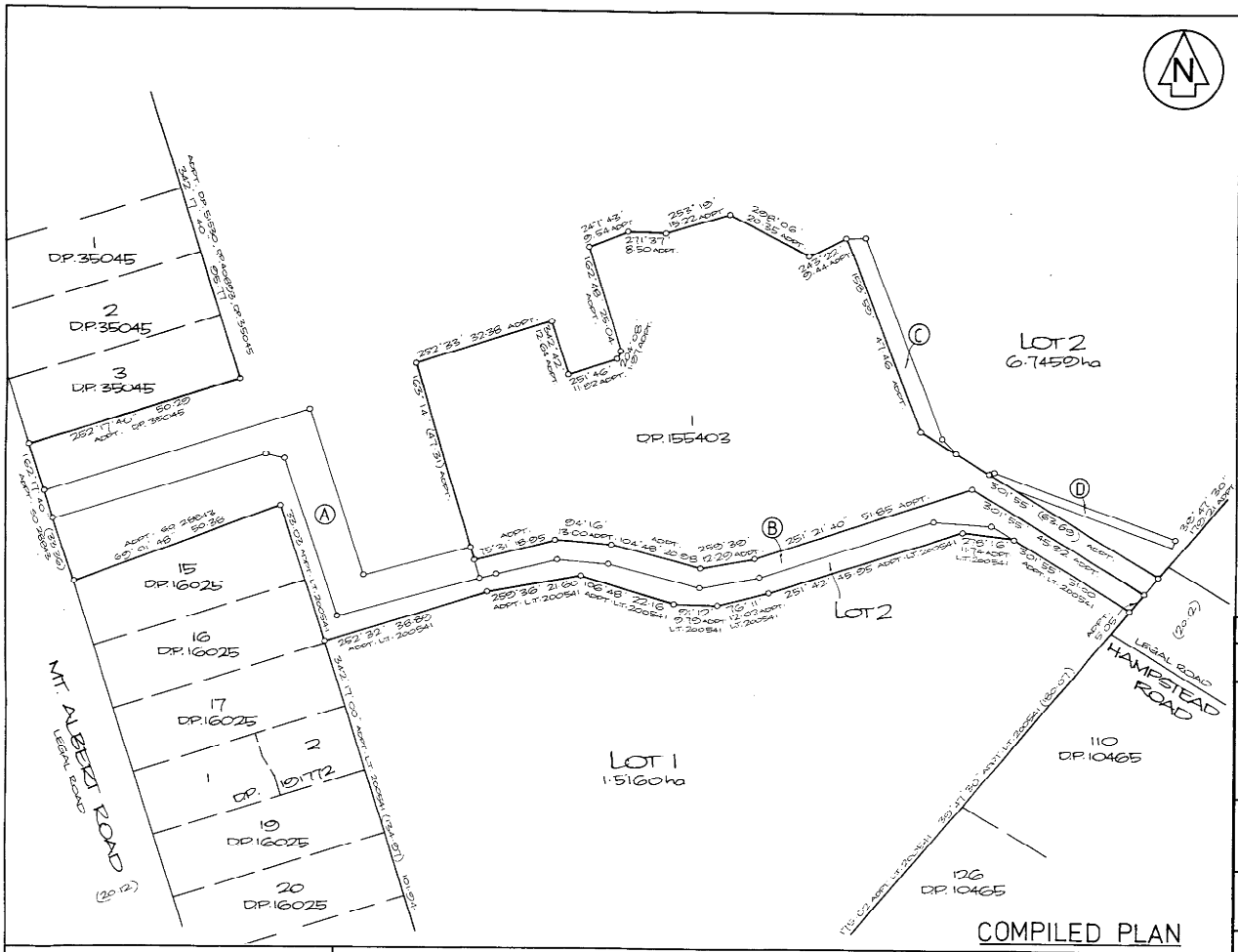

UNLESS OTHERWISE STATED ALL ADOPTIONS ARE FROM D.P. 155403

CLASS OF SURVEY : 1

Sheet 2 of 2

Approvals

Total Area

Comprised in

I ROBERT KEITH ANDERSON OF MT EDEN being a person entitled to practise as a registered surveyor certify that:

(a) The surveys to which this dataset relates are accurate, and were undertaken by me or under my direction in accordance with the Survey Act 1966 and the Survey Regulations 1998.

(b) This dataset is accurate and has been created in accordance with that Act and those Regulations.

Signed R K Anderson Date 1 3 2004

Field Book ..... p. Traverse Book ..... p.

Reference Plans

Examined Correct

Approved as to Survey by Land Information NZ on

6 / 10 / 2005

Deposited by Land Information NZ on

25/10/2005

File Received instructions 12 MAY 2004

D.P. 334046

LAND DISTRICT NORTH AUCKLAND
Survey Blk. & Dist. IV TITIRANGI
NZMS 261 Sheet Record Map No.

LOTS 1 - 3 BEING A SUBDIVISION OF LOTS 3 & 4 D.P. 203968

TERRITORIAL AUTHORITY AUCKLAND CITY
Surveyed by R.K. ANDERSON CONSULTANTS
Scale 1: 600 Date FEBRUARY 2004

COMPILED PLAN

A.J. BEVIN, SURVEYOR GENERAL, LAND INFORMATION, NEW ZEALAND

"APPROVED AN. 90 05"

RECORD OF TITLE
UNDER LAND TRANSFER ACT 2017
FREEHOLD
Search Copy

R.W. Muir
Registrar-General
of Land

Identifier	**868508**
Land Registration District	**North Auckland**
Date Issued	04 December 2018

Prior References
576051

Estate	Fee Simple
Area	1601 square metres more or less
Legal Description	Section 1 Survey Office Plan 528085
Purpose	Wastewater

Registered Owners
Watercare Services Limited

Interests

Subject to Part IV A Conservation Act 1987

Subject to Section 11 Crown Minerals Act 1991

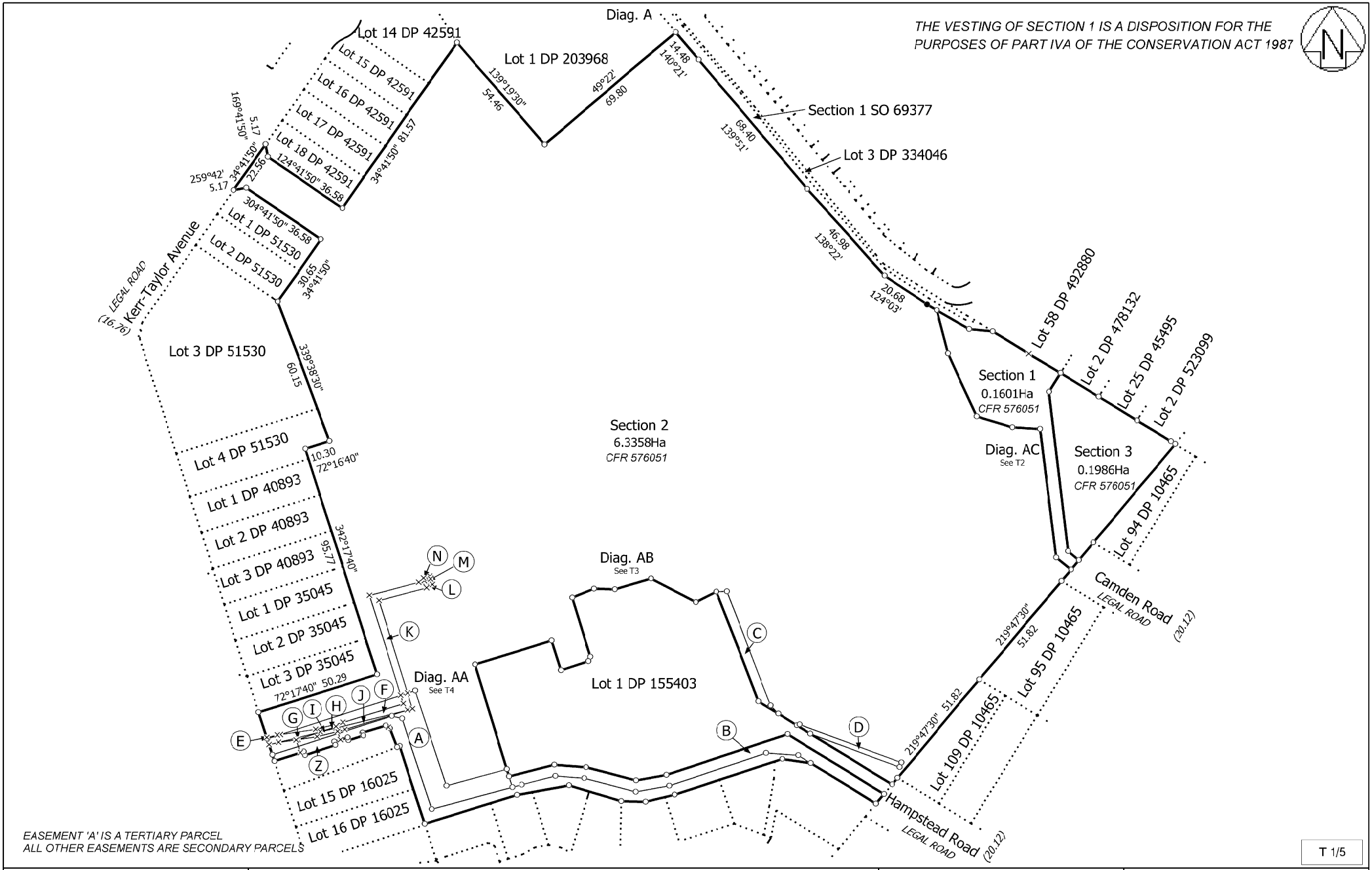

Land District: North Auckland Digitally Generated Plan Generated on: 03/10/2018 10:01am Page 3 of 7	Sections 1 to 3	Surveyor: Marcus John Thornton Hall Firm: Beca Limited	Title Plan SO 528085 Approved on: 1/10/2018

RECORD OF TITLE
UNDER LAND TRANSFER ACT 2017
FREEHOLD
Search Copy

R.W. Muir
Registrar-General
of Land

Identifier	**868508**
Land Registration District	**North Auckland**
Date Issued	04 December 2018

Prior References
576051

Estate	Fee Simple
Area	1601 square metres more or less
Legal Description	Section 1 Survey Office Plan 528085
Purpose	Wastewater

Registered Owners
Watercare Services Limited

Interests

Subject to Part IV A Conservation Act 1987

Subject to Section 11 Crown Minerals Act 1991

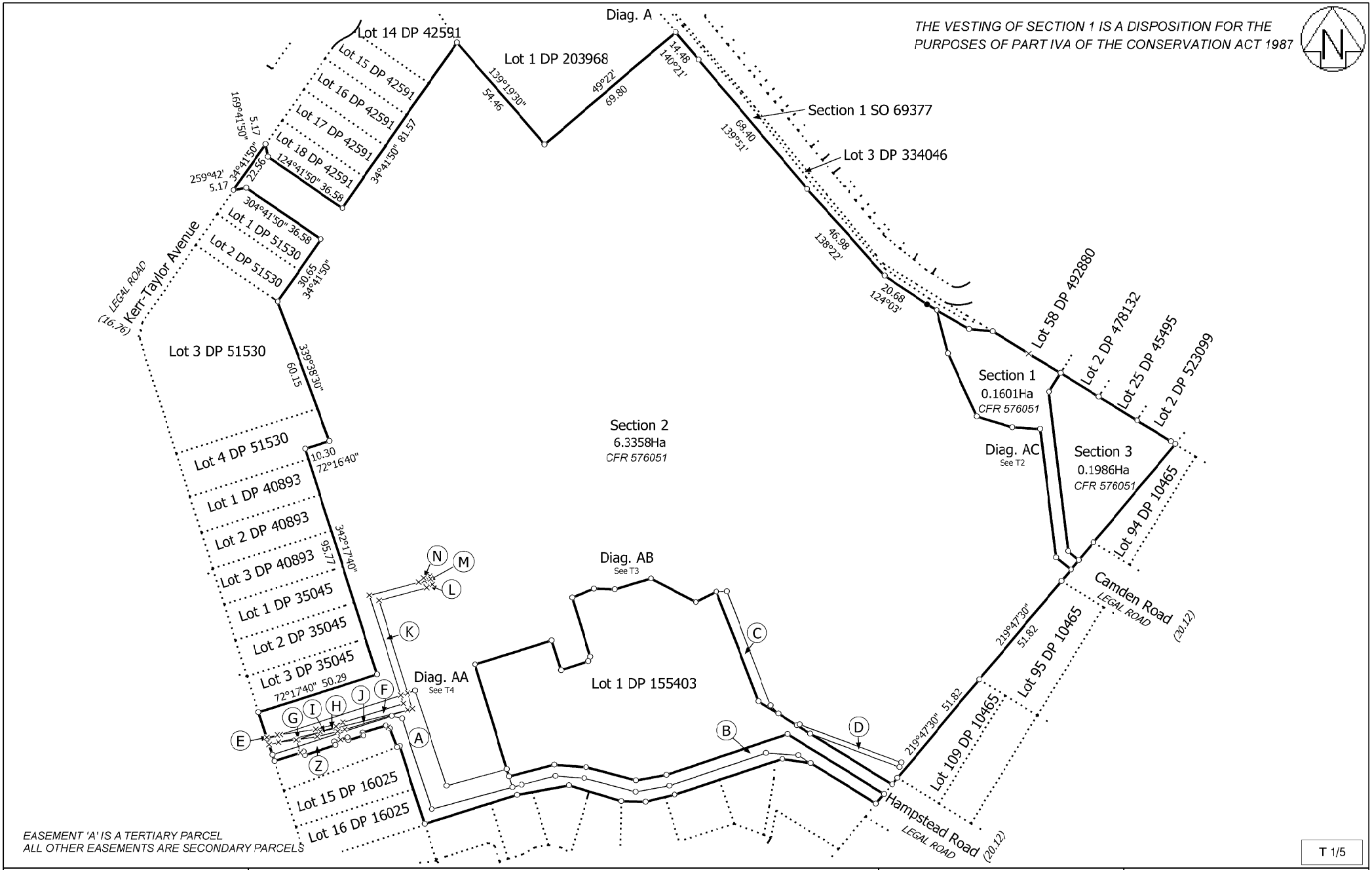

Land District: North Auckland Digitally Generated Plan Generated on: 03/10/2018 10:01am Page 3 of 7	Sections 1 to 3	Surveyor: Marcus John Thornton Hall Firm: Beca Limited	Title Plan SO 528085 Approved on: 1/10/2018

Appendix B: Drawings

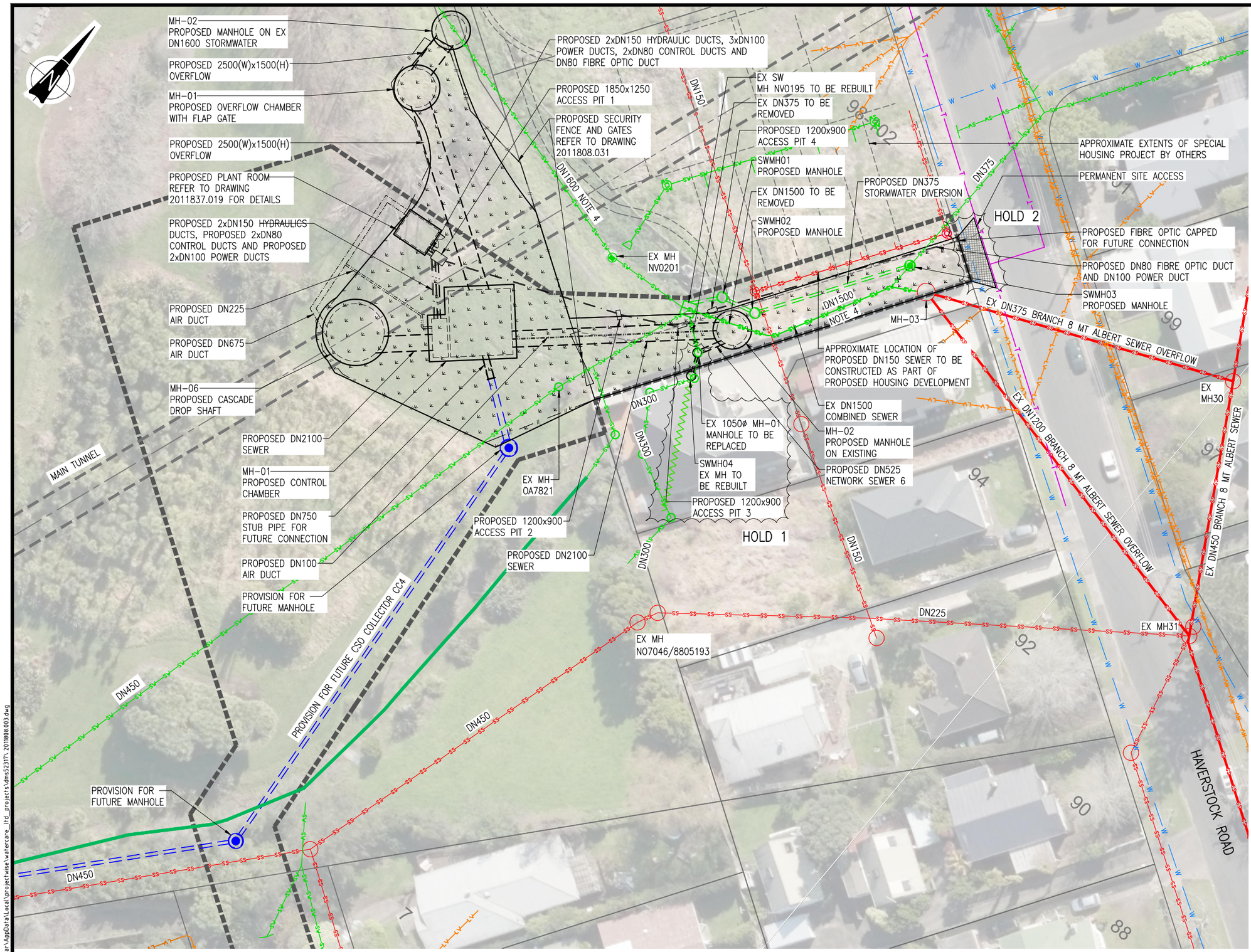

NOTES:

1. CO–ORDINATES ARE IN NZTM AND LEVELS ARE TO AUCKLAND L&S 1946 DATUM.
2. LOCATION OF EXISTING SERVICES HAVE BEEN EXTRACTED FROM AUCKLAND COUNCIL GIS AND UTILITIES PLANS AND ARE INDICATIVE. PHYSICAL LOCATION OF AFFECTED SERVICES WILL BE REQUIRED PRIOR TO CONSTRUCTION. ALL AFFECTED SERVICES SHALL BE PROTECTED DURING CONSTRUCTION.
3. THIS SET OF DRAWINGS IS TO BE READ IN CONJUNCTION WITH DRAWING SERIES 2011977 AND 2011819.
4. BURIED ROCK CHANNEL PRESENT IN CLOSE PROXIMITY OF EXISTING DN1500 AND DN1600 STORMWATER. CONTRACTOR TO VERIFY ON SITE.

LEGEND

- PROPOSED MAIN TUNNEL
- PROPOSED LINK SEWER
- FUTURE CSO COLLECTOR SEWER AND MANHOLE
- PROPOSED SEWERAGE
- PROPOSED STORMWATER
- PROPOSED POWER/CONTROL DUCT
- SW — EXISTING STORMWATER
- EXISTING STORMWATER STREAM
- SS — EXISTING NETWORK WASTEWATER
- SS — EXISTING TRANSMISSION WASTEWATER
- W — EXISTING WATERMAIN
- LV — LV POWER CABLE
- HV — HV POWER CABLE
- MV — MV POWER CABLE
- FIBRE OPTIC CABLE
- TRANSPOWER LINE
- VECTOR TRANSMISSION LINE
- COMM CABLES
- T — TELECOM
- GAS — GAS LINE
- X — TO BE ABANDONED
- EXISTING SEWER PREVIOUSLY ABANDONED
- DESIGNATION BOUNDARY
- PROPOSED ALL WEATHER TRAFFICABLE ACCESS
- PROPOSED AIR DUCT
- EXISTING STORMWATER PREVIOUSLY ABANDONED

HOLDS:

1. CONTRACTOR TO CONFIRM ALIGNMENT AND LEVEL OF EXISTING DN300 STORMWATER LINE ON SITE PRIOR TO CONSTRUCTION.
2. BY THE TIME OF CONSTRUCTION, VEHICLE CROSSING MAY HAVE BEEN CONSTRUCTED BY SPECIAL HOUSING DEVELOPER. LEVELS AND REINSTATEMENT REQUIREMENTS TO BE AGREED DURING CONSTRUCTION WITH DEVELOPER OR PROPERTY OWNERS.

CONSTRUCTION ISSUE

JACOBS AECOM McMILLEN JACOBS ASSOCIATES

PLAN
SCALE. 1:250 (A1)

SCALE 1:250 (A1) 0 5 10 15 20 25m

ISSUE	DATE	AMENDMENT	BY	APPD.
C	13.11.20	IFC – ASSET TAG NUMBERS UPDATED	WIS	CW
B	18.06.20	REVISED CONSTRUCTION ISSUE	WIS	CW
A	25.10.19	CONSTRUCTION ISSUE	KB	EB

	BY	DATE
DESIGNED	CW	12.15
DES. CHECKED	DJK	12.15
DRAWN	AP	04.15
DWG. CHECKED	CW	12.15
PROJECT LEADER	NK	08.17
INFRAST'R APP'D	SG	08.17

OPERATIONS

INFRASTRUCTURE

Watercare

COPYRIGHT – This drawing, the design concept, remain the exclusive property of Watercare Services Limited and may not be used without approval. Copyright reserved.

HAVERSTOCK RD – CENTRAL INTERCEPTOR (DSCIN)
00 SITE GENERAL
PROPOSED SITE LAYOUT

CAD FILE 2011808.003 | DATE 13.11.20
ORIGINAL SCALE A1 AS SHOWN | CONTRACT No. 6661
REF. No. CI–CIVIL | ISSUE
DWG. No. 2011808 .003 | C

Plot Date Nov 12, 2020 - 7:00pm C:\Users\ptar\AppData\Local\projectwise\watercare_ltd_projects\dms5231\ 2011808.003.dwg

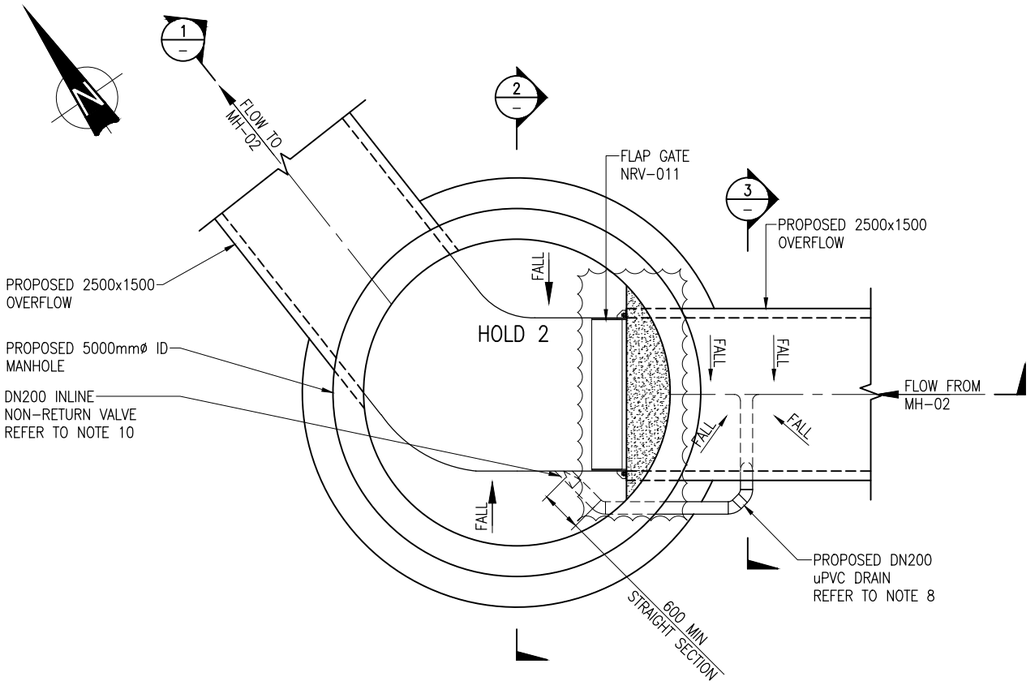

PLAN AT RL 30.25
SCALE. 1:50

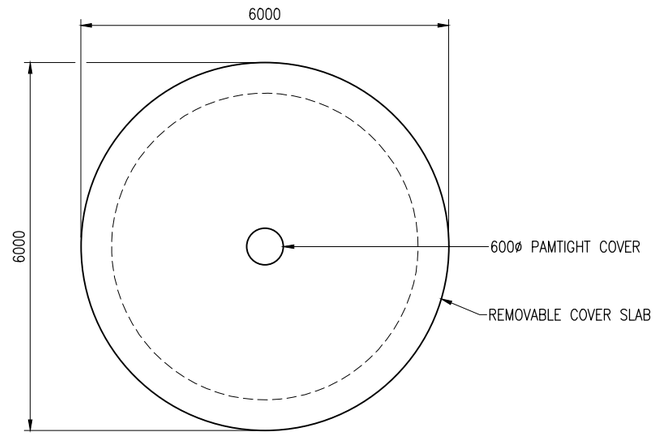

PLAN ON COVER SLAB
SCALE. 1:50

NOTES:

1. ALL LEVELS ARE IN METRES AND DIMENSIONS IN MILLIMETRES UNLESS OTHERWISE STATED.
2. CONCRETE COVER SLABS ON MANHOLES AND CHAMBERS SHALL BE HN-HO-72 RATED.
3. REFER TO WATERCARE STANDARD DRAWING 2000244.003 FOR DETAILS OF GALVANISED STEEL ACCESS LADDER.
4. ALL COVERS SHALL BE TRAFFICABLE AND HAVE INTEGRAL SAFETY GRILLES UNLESS OTHERWISE STATED.
5. BENCHING FALL SHALL BE 1:12 UNLESS OTHERWISE STATED.
6. ALL INTERNAL AND EXTERNAL CONCRETE ANGLES SHALL HAVE 25mm CHAMFERS OR FILLETS UNLESS OTHERWISE STATED.
7. REFER TO WATERCARE STANDARD DRAWINGS 2000244.001 TO 2000244.044 FOR GENERAL MANHOLE DETAILS.
8. REFER TO WATERCARE STANDARD DRAWING 2000244.014 FOR PIPE CONNECTION DETAILS.
9. REFER TO DRAWING 2011808.027 FOR PAVEMENT AND BASE COURSE DETAIL.
10. FIXING DETAIL OF IN-LINE NON-RETURN VALVE TO BE IN ACCORDANCE WITH THE MANUFACTURER'S SPECIFICATIONS.
11. ORDINARY BACKFILL MATERIAL IN ACCORDANCE WITH CLAUSE C2.16 OF CIVIL CONSTRUCTION STANDARD SPECIFICATION. BACKFILLING TO BE CARRIED OUT IN ACCORDANCE WITH CLAUSE C2.14 AND C2.15.

HOLDS:

1. CONTRACTOR TO CONFIRM LEVELS WITH THE ENGINEER PRIOR TO CONSTRUCTION.
2. GATE INSTALLATION DIMENSIONS TO BE FINALISED USING INFORMATION TO BE PROVIDED BY GATE MANUFACTURER.

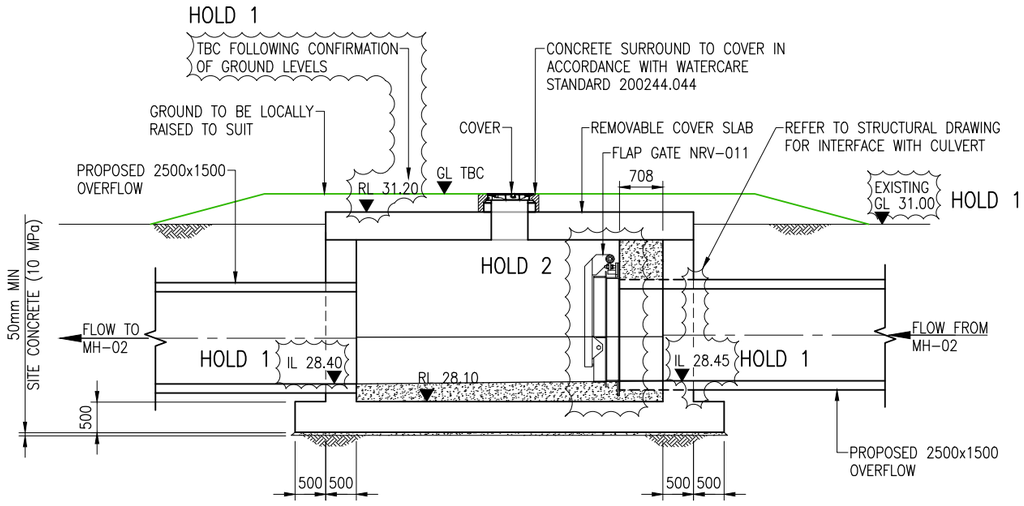

SECTION 1
SCALE.1:50

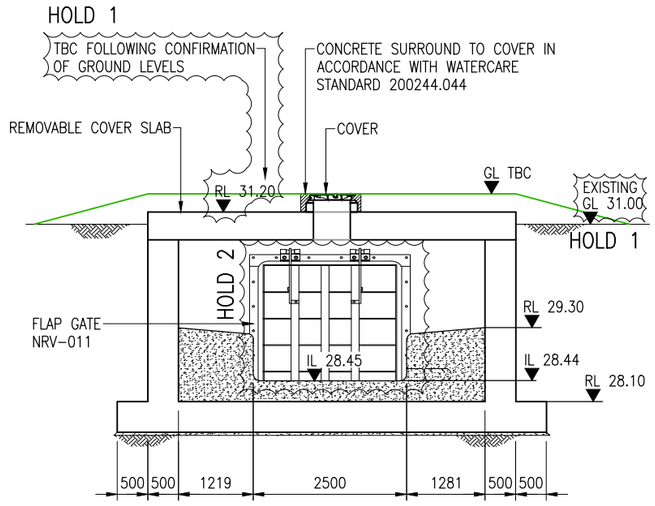

SECTION 2
SCALE.1:50

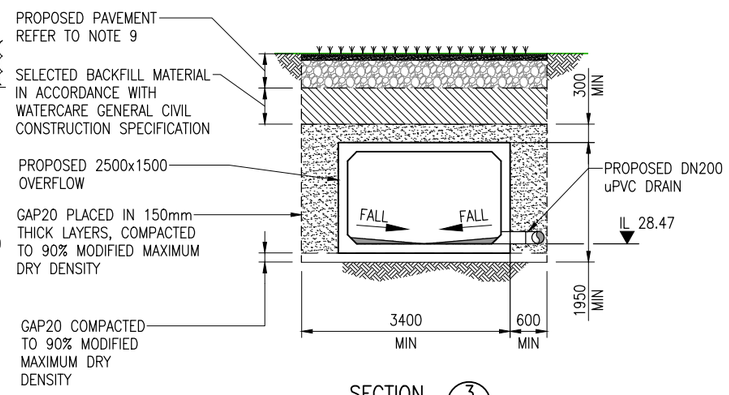

SECTION 3
SCALE.1:50

SCALE 1:50 (A1) 0 1000 2000 3000 4000 5000mm

CONSTRUCTION ISSUE

JACOBS AECOM McMILLEN JACOBS ASSOCIATES

ISSUE	DATE	AMENDMENT	BY	APPD.
B	13.11.20	IFC – ASSET TAG NUMBERS UPDATED	WIS	CW
A	25.10.19	CONSTRUCTION ISSUE	KB	EB

	BY	DATE
DESIGNED	CW	12.15
DES. CHECKED	DJK	12.15
DRAWN	RLH	08.15
DWG. CHECKED	CW	12.15
PROJECT LEADER	NK	08.17
INFRAST'R APP'D	SG	08.17

OPERATIONS

INFRASTRUCTURE

Watercare

COPYRIGHT – This drawing, the design concept, remain the exclusive property of Watercare Services Limited and may not be used without approval. Copyright reserved.

HAVERSTOCK RD – CI BRANCH SEWER 6 (DSC06)
85 OVERFLOW
MH-01 OVERFLOW CHAMBER – PLANS AND SECTIONS

CAD FILE 2011808.010	DATE 13.11.20
ORIGINAL SCALE A1 AS SHOWN	CONTRACT No. 6661
REF. No. CI-CIVIL	ISSUE
DWG. No. 2011808 .012	B

Plot Date: Nov 12, 2020 - 7:05pm C:\Users\pfan\AppData\Local\projectwise\watercare_ltd_projects\dms52317\ 2011808.012.dwg

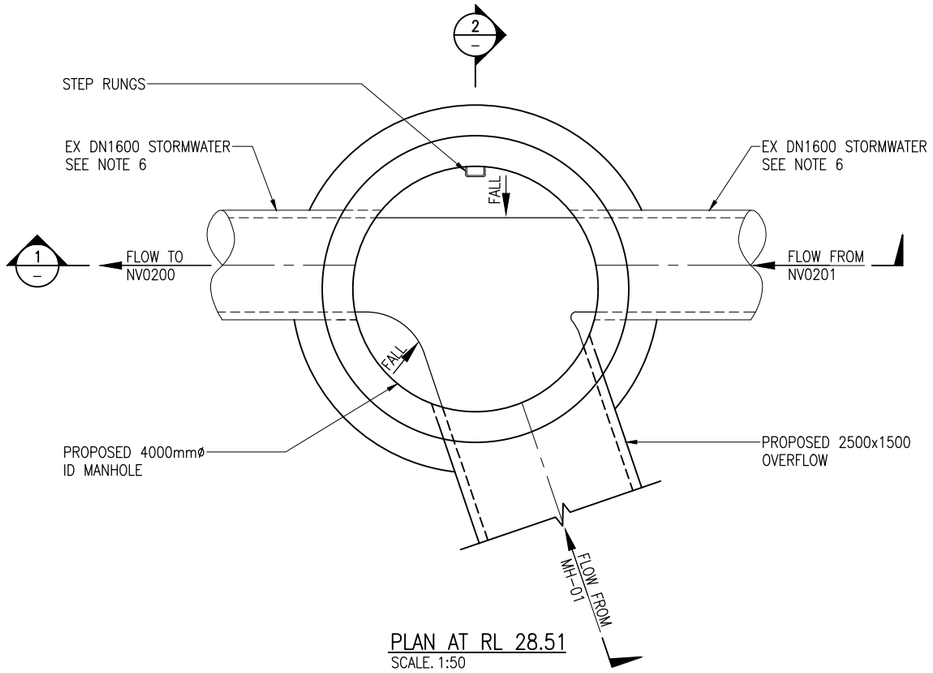

PLAN AT RL 28.51
SCALE. 1:50

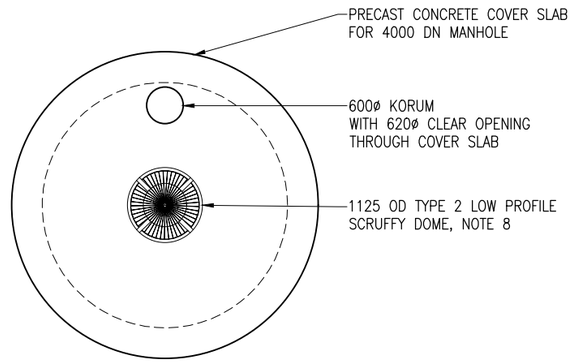

PLAN ON COVER SLAB
SCALE. 1:50

NOTES:

1. ALL LEVELS ARE IN METRES AND DIMENSIONS IN MILLIMETRES UNLESS OTHERWISE STATED.
2. CONCRETE COVER SLAB ON MANHOLES AND CHAMBERS SHALL BE HN-HO-72 RATED.
3. BENCHING FALL SHALL BE 1:10 AS PER AUCKLAND COUNCIL STORMWATER CODE OF PRACTICE DRAWING SW05.
4. REFER TO AUCKLAND COUNCIL STORMWATER CODE OF PRACTICE DRAWING SW05 AND SW09 FOR GENERAL STORMWATER MANHOLE DETAILS.
5. REFER TO AUCKLAND COUNCIL STORMWATER CODE OF PRACTICE DRAWING SW05 FOR PIPE CONNECTION DETAILS.
6. TEMPORARY DIVERSION OF FLOWS TO BE CONSISTENT WITH SPECIFICATIONS.
7. ORDINARY BACKFILL MATERIAL IN ACCORDANCE WITH CLAUSE C2.16 OF CIVIL CONSTRUCTION STANDARD SPECIFICATION. BACKFILLING TO BE CARRIED OUT IN ACCORDANCE WITH CLAUSE C2.14 AND C2.15.
8. TYPE 2 SCRUFFY DOME SHALL BE AS PER AUCKLAND COUNCIL STORMWATER CODE OF PRACTICE DRAWING SW21 REV 2. SCRUFFY DOME TO BE SUPPLIED COMPLETE WITH DOME FIXING BRACKETS AND GALVANISED/STAINLESS STEEL BOLTS SECURED TO INTERNAL FACE OF ROOF SLAB OPENING

HOLDS:

1. GROUND LEVEL AND ROOF COVER LEVEL TO BE CONFIRMED BY CONTRACTOR PRIOR TO CONSTRUCTION.

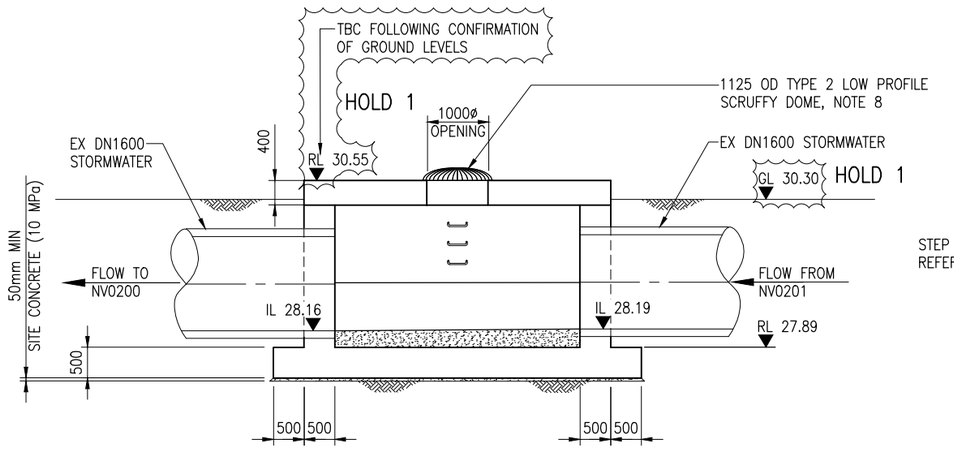

SECTION 1
SCALE.1:50

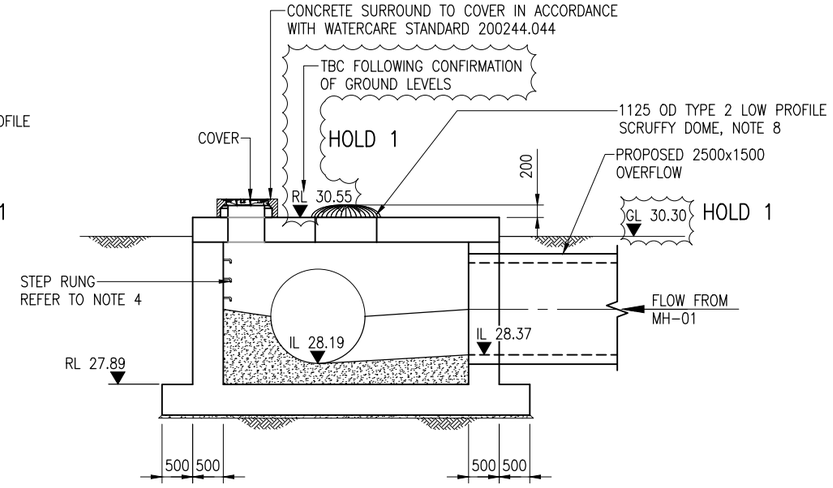

SECTION 2
SCALE.1:50

SCALE 1:50 (A1) 1000 0 1000 2000 3000 4000 5000mm

CONSTRUCTION ISSUE

JACOBS AECOM McMILLEN JACOBS ASSOCIATES

ISSUE	DATE	AMENDMENT	BY	APPD.
C	13.11.20	IFC – ASSET TAG NUMBERS UPDATED	WIS	CW

DESIGNED	CW	06.16
DES. CHECKED	DJK	06.16
DRAWN	RLH	06.16
DWG. CHECKED	CW	06.16
PROJECT LEADER	NK	08.17
INFRAST'R APP'D	SG	08.17
	BY	DATE

OPERATIONS

INFRASTRUCTURE

Watercare

COPYRIGHT – This drawing, the design concept, remain the exclusive property of Watercare Services Limited and may not be used without approval. Copyright reserved.

HAVERSTOCK RD – CI BRANCH SEWER 6 (DSC06)
85 OVERFLOW
MH-02 STORMWATER MANHOLE – PLANS AND SECTIONS

CAD FILE 2011808.011	DATE 13.11.20
ORIGINAL SCALE A1 AS SHOWN	CONTRACT No. 6661
REF. No. CI-CIVIL	ISSUE
DWG. No. 2011808 .011	C

Plot Date: Nov 12, 2020 - 7:05pm C:\Users\pfan\AppData\Local\projectwise\watercare_ltd_projects\dms5231\2011808.011.dwg

Appendix C: Flood Risk Assessment

Memorandum

To: Xenia Meier

From: Tess Gillham

Reviewed: Tim Hegarty

CC:

Subject: Central Interceptor Haverstock Road Flood Risk Management Assessment

Doc. Ref: JNZ-WSL-CIP-TM-0000070 Rev2

Date: 17 September 2021

Haverstock Road Shaft Site

The Central Interceptor project involves the construction of a new wastewater interceptor tunnel to collect, store and convey wastewater to the Mangere Wastewater Treatment Plant.

The Central Interceptor Haverstock Road shaft site will divert the combined sewer overflow at 96 Haverstock Road into the Central Interceptor main tunnel. Currently, this overflow is discharged into the Meola Creek via an existing DN1600 stormwater pipe. The upstream catchment is a combination of combined sewer, separated stormwater reticulation and disposal of stormwater via soakage.

In the 1990's, the DN1600 stormwater pipe was installed to pipe Meola Creek between the spring headwaters (located on Plant and Food Research land near Camden Road) and Kerr Taylor Park. This pipe ensured the combined sewer overflows were conveyed below ground past nearby private properties.

Rainfall and the combined sewer overflow are contained within this existing DN1600 stormwater pipe and above this pipe there is a formed swale. A number of scruffy domes link the swale to the DN1600 stormwater pipe. In most cases, these scruffy domes are raised above the swale ground level.

Two existing stormwater pipes (DN375 and DN450) discharge into the head of the DN1600 stormwater pipe. Additionally, there are other minor stormwater outlets which discharge into the swale from the nearby housing developments.

Assets Located Within the Flood Plain

At the Haverstock Road shaft site, two new manholes are to be constructed within the flood plain, outside of the existing designation, refer Figure 1

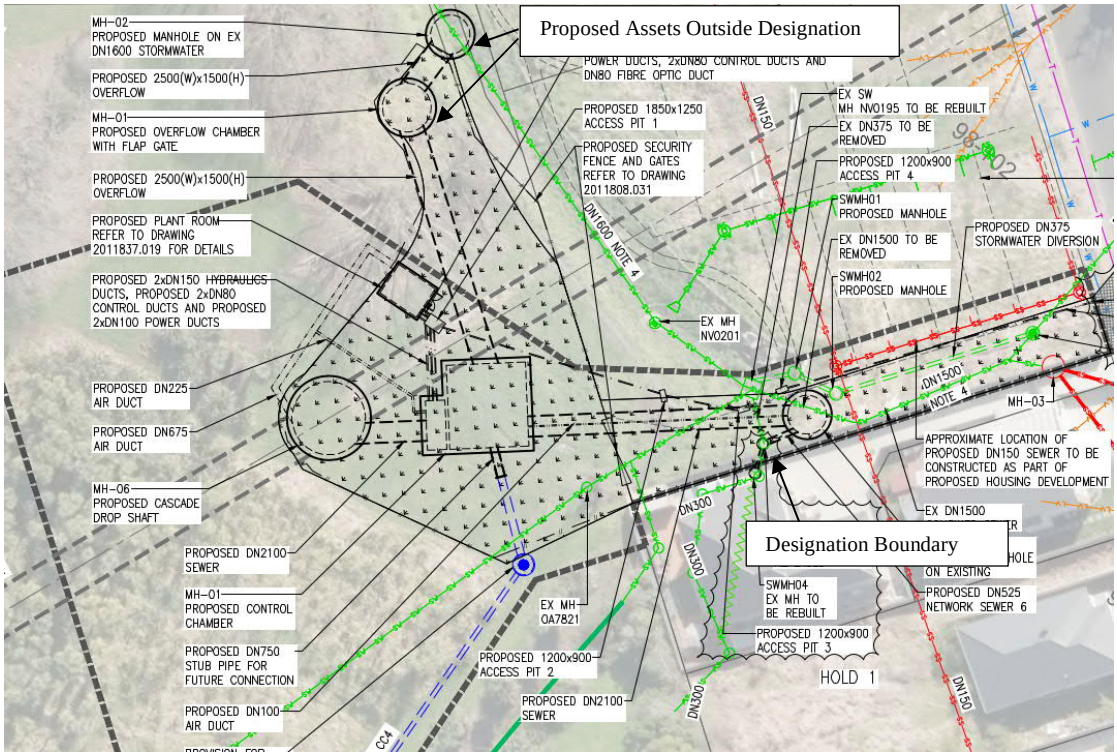

Figure 1. Site Plan, MH-01 and MH-02

Manhole (MH-01) is to be located on the top bank of the existing swale. Drawing 2011808.012B, refer Figure 2, shows the existing ground level to be 31.0mRL at MH-01 and that the final lid level is approximately 200mm above the existing ground level. The drawing also shows some minor recontouring of ground levels will be required around MH-01 to ensure it is hidden from view with only the access hatch visible. There is a hold on the drawing for ground levels to be confirmed during construction. Recent survey has shown that the ground level at MH-01 is between 31.5mRL and 31.7mRL. Hence this manhole will be buried below existing ground.

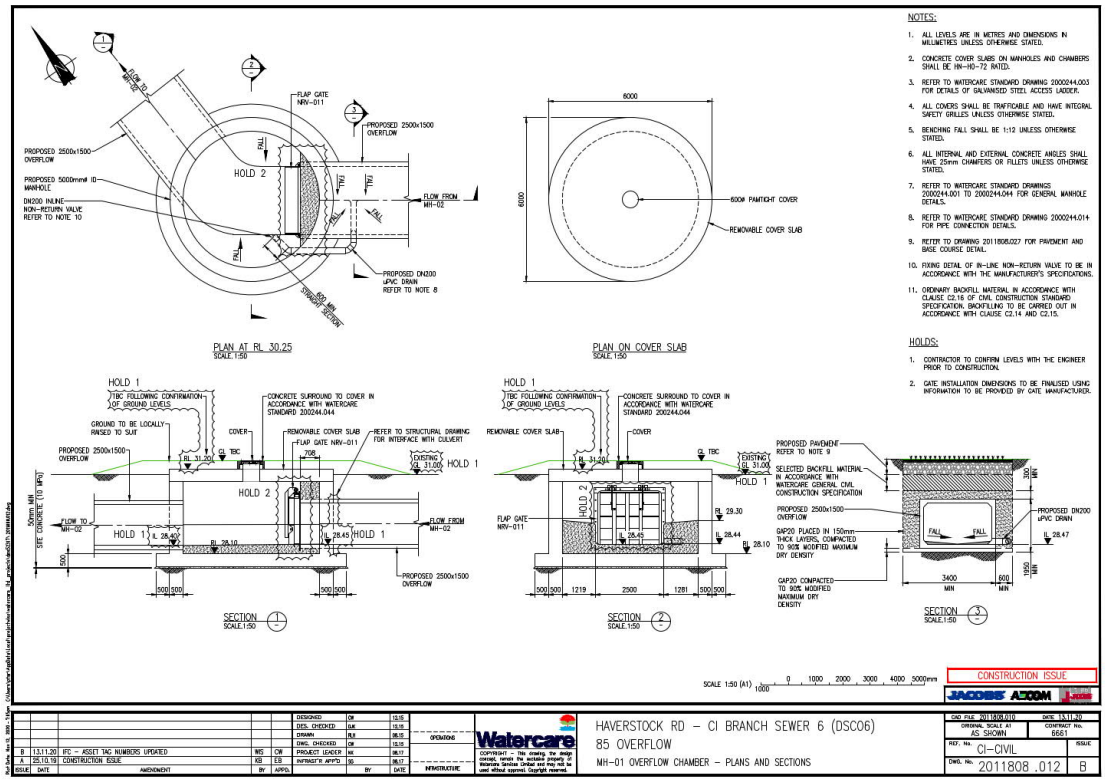

Figure 2. Drawing 2011808.012B – MH-01

Manhole (MH-02) is located within the base of the existing swale. Drawing 2011808.011C, refer Figure 3, shows the final lid level of MH-02 is located approximately 250mm above the existing swale invert level. There is also a hold on this drawing for the ground levels to be confirmed during construction. MH-02 has a new scruffy dome provided on top of its lid, which will assist with linking the existing swale to the existing DN1600 stormwater pipe. An access hatch is also provided through the lid for maintenance access, if required.

Drawing 2011808.011C does not show the existing swale profile. Recent survey of the swale at MH02 has shown the existing swale has an invert level of 30.3mRL and base width of 2 m. Therefore the majority of MH-02 is buried below ground beneath the existing swale. There is a loss of 0.5 m^2 in cross sectional area in the swale due to the construction of MH-02. To compensate for the loss in cross sectional area, when reinstating the site after construction of both MH-01 and MH02, it is proposed to increase the width of the swale by approximately 0.5m at MH02.

All other proposed infrastructure is located below ground.

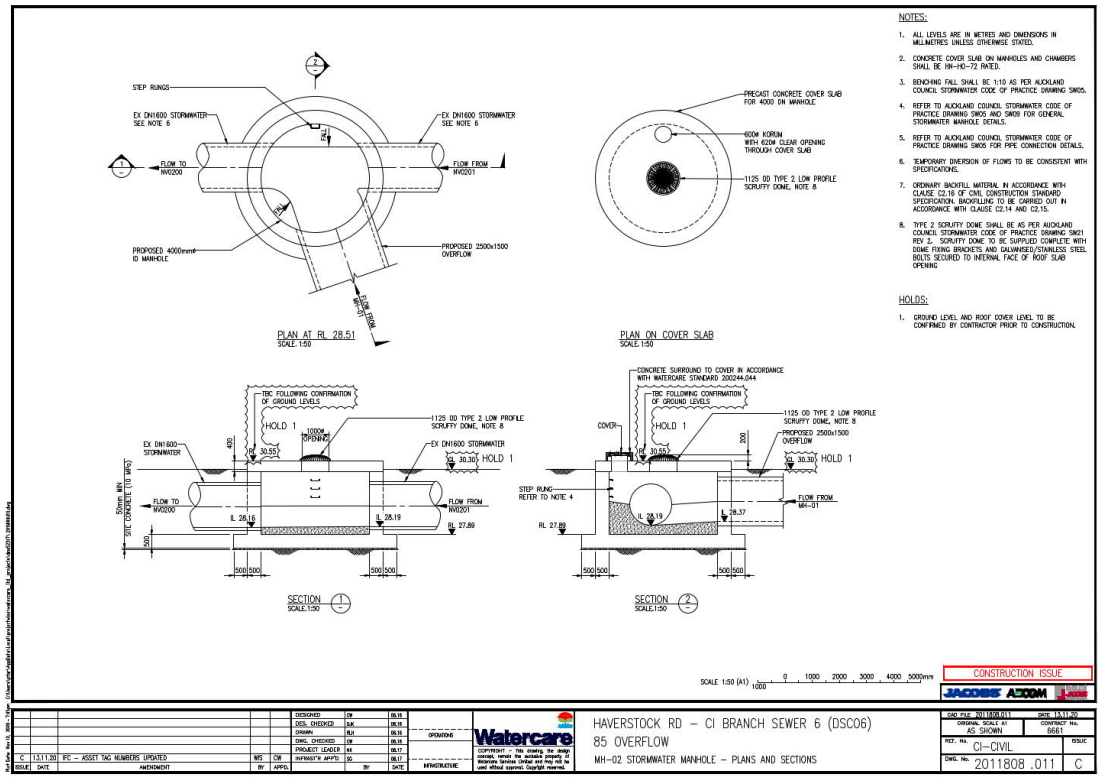

Figure 3. Drawing 2011808.011C – MH-02

Catchment Flows

Auckland Council GeoMaps shows the Haverstock Road shaft site is subjected to overland flows and flooding, refer Figure 4. Auckland Council Healthy Waters has provided design flows from the Meola Catchment Modelling study (URS, 2014), refer Table 1.

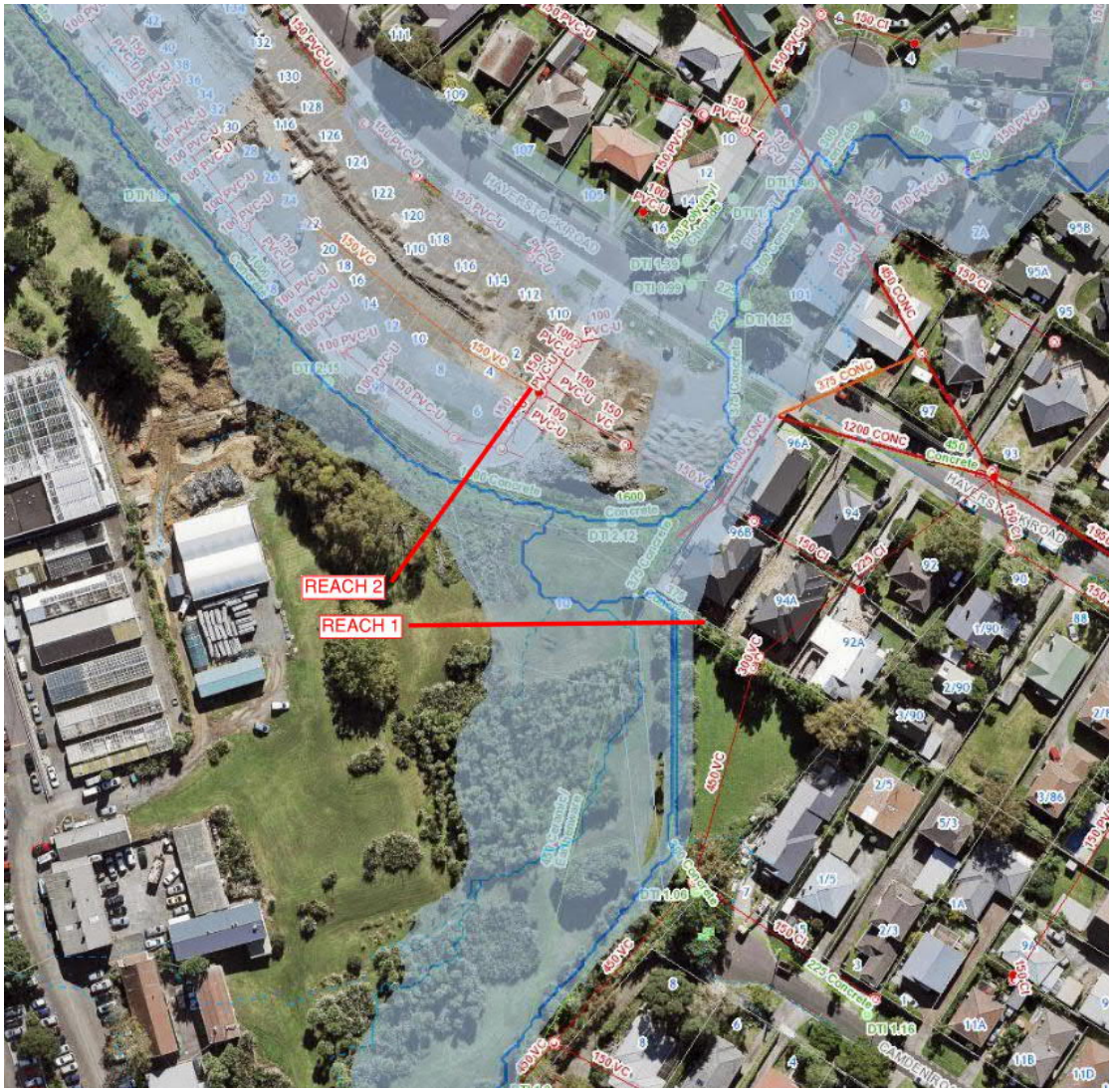

Figure 4. Catchment Flow Reaches

Table 1. Catchment Stormwater Flows

Reach	2-Year ARI Flow (m^3/s)	10-Year ARI Flow (m^3/s)	100-Year ARI Flow (m^3/s)
1	1.25	2.41	4.73
2	5.64	7.14	10.41

The flows shown in Table 1 are the largest stormwater flows once the Central Interceptor main tunnel is commissioned.

Once the Central Interceptor main tunnel is commissioned, the existing DN1600 stormwater pipe will remain largely empty, except for flows from the existing DN375 and DN450 stormwater pipes which will continue to discharge into it. As a consequence, the existing DN1600 stormwater pipe will become available to convey overland flows and flood flows. The existing scruffy domes allow overland flows and flood flows to drop into the DN1600 stormwater pipe.

The capacity of the existing DN1600 stormwater pipe is controlled by tailwater, as downstream flooding is throttled by the capacity of the downstream Alberton Avenue culvert. Preliminary calculations show the existing capacity of the DN1600 stormwater pipe is ~ 4.17 m^3/s assuming a tailwater level of 28mRL at the outfall (current ~100-Year Average Recurrence Interval (ARI) flood level).

As overland/flood flows will drop into the existing DN1600 stormwater pipe (via the existing scruffy domes), overland/flood flows contained within the existing swale will reduce as shown in Table 2.

Table 2. Reduced Catchment Stormwater Overland Flows

Reach	**2-Year ARI Flow (m^3/s)**	**10-Year ARI Flow (m^3/s)**	**100-Year ARI Flow (m^3/s)**
1	1.25	2.41	4.73
2	1.47	2.97	6.24

The capacity of the existing swale varies along the length depending on the cross-sectional area and longitudinal gradient. Note that the cross-sectional areas and longitudinal gradients are not constant along the swale length. Calculations at three separate cross sections, assuming a constant gradient of 0.68% indicate the capacity of the swale to vary from 6.7 m^3/s to 13.7 m^3/s.

In summary, the construction of the Central Interceptor main tunnel will remove combined sewer overflows at the Haverstock Road shaft site. As well as having significant environment and water quality benefits, removing the combined sewer overflows results in the existing infrastructure, the DN1600 stormwater pipe and the swale, having sufficient capacity to convey up the 100-Year ARI flow.

Flooding Conclusions

Overall, flooding is expected to decrease at the Haverstock Road shaft site and there will be a significant reduction of combined sewer overflows in the Meola catchment as a consequence of the construction of the Central Interceptor main tunnel. All infrastructure is buried below ground except for MH-02. MH-02 will cause the existing swale base to rise slightly before dropping back down to existing ground level.

The capacity of the existing swale varies along its length due to variances in the depth, width and longitudinal gradient. Overall, the existing swale and the existing DN1600 stormwater pipe have capacity to convey up to the 100-Year ARI storm event. If the Central Interceptor main tunnel is overflowing to the DN1600 stormwater pipe, flooding will be no worse than what currently exists. The construction of MH-02 within the base of the existing swale is not expected to affect the capacity of the swale. Provision of the additional scruffy dome on top of MH-02 will assist with conveying flood flows to the existing DN1600 stormwater pipe. When reinstating the site after construction of both MH-01 and MH-02, it is proposed to make the swale slightly wider (0.5 metres wider at MH02) to ensure there is no loss in cross sectional area.

Assessment Criteria

Relevant Criteria	Assessment
Rule E36.8.2 (17) – for the operation, maintenance, renewal, repair and minor infrastructure upgrading of infrastructure in the coastal erosion hazard area; or in the coastal storm inundation 1 percent annual exceedance probability (AEP) area; or in the coastal storm inundation 1 percent annual exceedance probability (AEP) plus 1m sea level rise area; or in the 1 percent annual exceedance probability (AEP) floodplain; or in overland flow paths; or on land which may be subject to land instability: 1. the long-term management, maintenance and monitoring of any mechanisms associated with managing the risk of adverse effects resulting from the placement of infrastructure within a hazard area to other people, property and the environment including the management of hazardous substances; 2. the extent to which residual risks to people, property and the environment resulting from any mitigation measures implemented to manage the hazard; 3. the extent to which an existing hazard is exacerbated or a new hazard is created as a result of the structure; 4. the extent to which the proposal includes non-structural solutions to protect infrastructure from the hazard and resulting adverse effects; and 5. the extent to which landscape values and/ or public access are affected by the proposed structure or structures associated with the mitigation of the hazard.	1. Proposed manholes MH-01 and MH-02 will be regularly monitored by Watercare. 2. The existing swale is currently inaccessible to the general public. Hence the general public are unable to access proposed manholes MH-01 and MH-02. Overall, the construction of the Central Interceptor main tunnel will reduce flooding within the catchment. 3. The existing hazards will reduce with the construction of Central Interceptor main tunnel as flooding will reduce. MH-01 will be buried below ground. MH-02 is mostly buried below ground. MH-02 will have a scruffy dome which will assist with conveying overland flow into the existing DN1600 stormwater pipe. The existing swale will be made slightly wider (0.5 m) when reinstating the site so there is no net effect of constructing MH-02 in the swale. 4. Not Applicable. 5. The existing swale is currently inaccessible to the general public. The swale already has a number of scruffy domes and outlets located within it. Overall, there will be two manhole access hatches, a small section of MH-02's concrete manhole lid and new scruffy dome visible from the ground surface. Overall landscape values will not be affected by the construction of these small structures. When reinstating the site, the swale will be made slightly wider at MH-02 to ensure there is no reduction in cross section area.

Appendix D: Easement Agreement

Department of Conservation
Te Papa Atawhai

Concession Document
(Easement)

Concession Number: 86289-OTH

THIS CONCESSION is made this 28th day of July 2020

PARTIES:

Minister of Conservation (the Grantor)

Watercare Services Limited (the Concessionaire)

BACKGROUND

A. The Department of Conservation ("Department") Te Papa Atawhai is responsible for managing and promoting conservation of the natural and historic heritage of New Zealand on behalf of, and for the benefit of, present and future New Zealanders.

B. The Department is under the control of the Grantor.

C. The carrying out of these functions may result in the Grantor granting concessions to carry out activities on public conservation land.

D. The Grantor administers the public conservation land described in Schedule 1 as the Easement Land.

E. The Conservation legislation applying to the Easement Land authorises the Grantor to grant a concession over the Easement Land.

F. The Concessionaire wishes to carry out the Concession Activity on the Easement Land subject to the terms and conditions of this Concession.

G. The Concessionaire acknowledges that the Easement Land may be the subject of Treaty of Waitangi claims.

H. The Parties wish to record the terms and conditions of this Concession.

OPERATIVE PARTS

I. In exercise of the Grantor's powers under the Conservation legislation the Grantor **GRANTS** to the Concessionaire an **EASEMENT** to carry out the Concession Activity on the Easement Land subject to the terms and conditions contained in this Concession, including its Schedules.

SIGNED on behalf of the Minister of Conservation by **Andrew Baucke, Director Operations, Auckland**, acting under delegated authority	SIGNED for **Watercare Services Limited** by: Director Name: SHANE CUNIS

in the presence of: LAChartres Witness Signature Witness Name: Laura Chartres Witness Occupation: Personal Assistant Witness Address: 24 Wellesley Street, Auckland 1010	AND SIGNED for **Watercare Services Limited** by: Director Name:

SCHEDULE 1

1.	**Easement Land** (burdened land - the land where the easement activity occurs) (Schedule 4)	As marked in "red" on the attached map in Schedule 4 being: Physical Description/Common Name: Meola Creek Marginal Strip (R11554) Land Status: Held as Fixed Marginal Strip under s.24(3) of the Conservation Act 1987 Area: 25m² Legal Description: Part Section 1 SO 69377 CT 868508, SECT 1 SO 528085. Map Reference: Approximate NZTM 2000 co-ordinates E1753980 N5915947; NAPALIS ID: 2798190
2.	**Land** (benefited land - the land that benefits from the easement) (If none then select "in gross") (Schedule 4)	Is the easement in gross? No As marked on the attached plan or map in Schedule 4 being the land in record of title: Part Section 1 SO 69377 CT 868508, SECT 1 SO 528085.
3.	**Concession Activity** (clause 2)	(a) a right to drain water: (b) a right to drain sewage: for the purpose of extending a pre-existing Central Interceptor wastewater system, as shown in schematic diagram in Schedule 4.
4.	**Term** (clause 3)	60 years commencing on 01 August 2020
5.	**Final Expiry Date** (clause 3)	31 July 2080
6.	**Concession Fee** (clause 4)	**Concession Activity Fee:** $900.00 per annum plus GST **Concession Management Fee:** $250.00 per annum plus GST
7.	**Concession Fee Payment Date** (clause 4)	Annually, on or before the date specified on the invoice issued by the Grantor.
8.	**Penalty Interest Rate** (clause 4)	Double the current Official Cash Rate (OCR). See Reserve Bank of New Zealand website

9.	**Concession Fee Review Date(s)** (clause 5)	3 yearly on the anniversary (and for the duration) of this Concession.
10.	**Insurance** (To be obtained by Concessionaire) (clause 11)	Types and amounts: Public Liability Insurance for general indemnity for an amount no less than $1,000,000.00.
11.	**Addresses for Notices** (clause 20)	The Grantor's address is: Dunedin Permissions Team Level 1, John Wickliffe House 265 Princes Street Dunedin, 9016 Phone: 03 477 0677 Email: permissions@doc.govt.nz
		The Concessionaire's address in New Zealand is: 73 Remuera Road Remuera Auckland 1141 New Zealand Phone: 09 442 2222 Email: Tom.Anderson@water.co.nz
12.	**Special Conditions** (clause 25)	See Schedule 3
13.	**Processing Fee** (clause 4)	$2,065.00 plus GST

Note: The clause references are to the Grantor's Standard Terms and Conditions set out in Schedule 2.

SCHEDULE 2

STANDARD TERMS AND CONDITIONS

1. Interpretation

1.1 The Concessionaire is responsible for the acts and omissions of its employees, contractors, agents, clients and invitees (excluding other members of the public accessing the Easement Land). The Concessionaire is liable under this Concession for any breach of the terms of the Concession by its employees, contractors, agents, clients and invitees (excluding other members of the public accessing the Easement Land), as if the breach had been committed by the Concessionaire.

1.2 Where this Concession requires the Grantor to exercise a discretion or give any approval or provides for any other actions by the Grantor, then the Grantor must act reasonably and within a reasonable time. When a consent is required under this Concession such consent must not be unreasonably withheld.

2. What is being authorised?

2.1 The Concessionaire is only allowed to use the Easement Land for the Concession Activity.

2.2 The Concessionaire must not commence the Concession Activity until the Concessionaire has signed the Concession Document and returned one copy of this Document to the Grantor, as if it were a notice to be given under this Concession.

3. How long is the Concession for - the Term?

3.1 This Concession commences on the date specified in Item 4 of Schedule 1 and ends on the Final Expiry Date specified in Item 5 of Schedule 1.

4. What are the fees and when are they to be paid?

4.1 The Concessionaire must pay the Processing Fee (Item 13 of Schedule 1) to the Grantor in the manner directed by the Grantor. Except where the Grantor's written consent has been given, the Concessionaire cannot commence the Concession Activity until the Processing Fee has been paid.

4.2 The Concessionaire must pay to the Grantor in the manner directed by the Grantor the Concession Fee plus GST on the Concession Fee Payment Date specified in Items 6, and 7 of Schedule 1.

4.3 If the Concessionaire fails to make payment within 14 days of the Concession Fee Payment Date then the Concessionaire is to pay interest on the unpaid Concession Fee from the Concession Fee Payment Date until the date of payment at the Penalty Interest Rate specified in Item 8 of Schedule 1.

5. When can the fee be reviewed?

5.1 The Grantor is to review the Concession Fee on the Concession Fee Review Date in Item 9 of Schedule 1 in the following manner:

(a) The Grantor must commence the review not earlier than 3 months before a Concession Fee Review Date and no later than 9 months following the Concession Fee Review Date by giving notice to the Concessionaire.

(b) Subject to clause 5.1(e) the notice must specify the Concession Fee which the Grantor considers to be the market value for the Concession Activity as at the Concession Fee Review Date having regard to the matters specified in section 17Y(2) of the Conservation Act 1987.

(c) If, within 28 days of receipt of the Grantor's notice, the Concessionaire gives notice to the Grantor that the Concessionaire disputes the proposed new Concession Fee the new Concession Fee is to be determined in accordance with clause 5.2.

(d) If the Concessionaire does not give notice to the Grantor under clause 5.1(c) the Concessionaire is to be deemed to have accepted the Concession Fee specified in the Grantor's notice.

(e) Notwithstanding clause 5.1(b) the new Concession Fee so determined or accepted must not be less than the Concession Fee payable during the year preceding the particular Concession Fee Review Date and is to be the Concession Fee payable by the Concessionaire from the Concession Fee Review Date.

(f) Until determination of the new Concession Fee, the Concession Fee payable by the Concessionaire from the Concession Fee Review Date is to be the Concession Fee specified in the Grantor's notice. On determination of the new Concession Fee in accordance with clause 5.2 an adjustment is to be made and paid, either by the Grantor or by the Concessionaire, whichever is applicable.

5.2 Immediately the Concessionaire gives notice to the Grantor under clause 5.1(c) the parties are to endeavour to agree on a new Concession Fee. If the parties are unable to reach agreement within 28 days the new Concession Fee is to be determined either:

(a) By one party giving notice to the other requiring the new Concession Fee to be determined in accordance with the Disputes clause (clause 19) or, if the parties agree,

(b) by registered valuers acting as experts and not as arbitrators as follows:

(i) Each party must appoint a valuer and give notice of the appointment to the other party within 14 days of the parties agreeing to determine the new Concession Fee by this means.

(ii) If the party receiving a notice does not appoint a valuer within the 14 day period the valuer appointed by the other party is to determine the new Concession Fee and that valuer's determination is to be binding on both parties.

(iii) Before commencing their determination the respective valuers must appoint an umpire who need not be a registered valuer.

(iv) The valuers are to determine the new Concession Fee which they consider to be the market value for the Concession Activity as at the Concession Fee Review Date having regard to the matters specified in section 17Y(2) of the Conservation

Act 1987 but in no case is the new Concession Fee to be less than the Concession Fee payable during the year preceding the particular Concession Fee Review Date. If the valuers fail to agree, the Concession Fee is to be determined by the umpire.

(v) In determining the Concession Fee the valuers or umpire are to disregard the annual cost to the Concessionaire to maintain or provide access to the Easement Land.

(vi) Each party is to be given the opportunity to make written or oral representations or submissions to the valuers or the umpire subject to such reasonable time and other limits as the valuers or the umpire may prescribe.

(vii) The valuers or the umpire must have regard to any such representations but are not bound by them.

(c) The valuers or umpire must give written notice to the parties once they have determined the new Concession Fee. The notice is to be binding on the parties and is to provide how the costs of the determination are to be borne.

(d) If a Concession Fee Review Date is postponed because of a moratorium imposed by law the Concession Fee Review is to take place at the date the moratorium is lifted or so soon afterwards as is practicable and the following applies:

(i) the Concession Fee Review is to establish the market value for the Concession Activity as at that date instead of the date fixed under clause 5.1 having regard to the matters specified in section 17Y(2) of the Conservation Act 1987 but in no case is the new Concession Fee to be less than the Concession Fee payable during the year preceding the particular Concession Fee Review Date; and

(ii) each subsequent Concession Fee Review is to take place in accordance with the procedure fixed in clause 5.1.

6. Are there any other charges?

6.1 The Concessionaire must pay all levies rates and other charges, including utility charges payable in respect of the Easement Land or for the services provided to the Easement Land which relate to the Concessionaire's use of the Easement Land or the carrying on of the Concession Activity.

6.2 The Grantor is not liable for any cost incurred in re-establishing the supply of any utilities in the event of any of them becoming unavailable for any reason.

6.3 Where the Grantor has paid such levies, rates or other charges the Concessionaire must on receipt of an invoice from the Grantor pay such sum to the Grantor within 14 days of receiving the invoice. If payment is not made within the 14 days then the Concessionaire is to pay interest on the unpaid sum from the date payment was due until the date of payment at the Penalty Interest Rate specified in Item 8 of Schedule 1.

7. When can the Concession be assigned?

7.1 The Concessionaire must not transfer, sublease, assign, mortgage or otherwise dispose of the Concessionaire's interest under this Concession or any part of it (which includes the Concessionaire entering into a contract or any other arrangement whatsoever whereby the Concession Activity would be carried out by a person (called the Assignee) other than the Concessionaire) without the prior written consent of the Grantor.

7.2 The Grantor may in the Grantor's discretion under clause 7.1:

(a) decline any application for consent; or

(b) grant consent subject to such conditions as the Grantor thinks fit.

7.3 Sections 17S to 17ZC of the Conservation Act 1987 apply to applications for consent under this clause unless the Grantor, in the Grantor's discretion, decides otherwise.

7.4 If the Grantor gives consent under this clause then the Concessionaire remains liable to observe and perform the terms and conditions of this Concession throughout the Term and is to procure from the Assignee a covenant to be bound by the terms and conditions of this Concession.

7.5 The Concessionaire must pay the costs reasonably incurred by the Grantor incidental to any application for consent, whether or not such consent is granted.

7.6 If the Concessionaire is not a publicly listed company any change in the shareholding of the Concessionaire altering the effective control of the Concessionaire is to be deemed to be an assignment and requires the consent of the Grantor.

8. What are the obligations to protect the environment?

8.1 The Concessionaire must not, without the prior consent of the Grantor:

(a) cut down or damage any vegetation; or

(b) damage any natural feature or historic resource on the Easement Land; or

(c) light any fire on the Easement Land.

8.2 The Concessionaire must, at its cost:

(a) keep the easement facility (as defined in Schedule 5) now or hereafter upon the Easement Land, in good order, condition and repair; and

(b) must keep the Easement Land in a clean and tidy condition.

8.3 The Concessionaire must not store hazardous materials on the Easement Land nor store other materials on the Easement Land where they may obstruct the public or create a nuisance.

9. When can structures be erected?

9.1 The Concessionaire must not erect, nor place any structures on, under or over the Easement Land without the prior consent of the Grantor.

10. What if the Concessionaire wishes to surrender the Concession?

10.1 If the Concessionaire wishes to surrender this Concession during the currency of the Term, then the Grantor may accept that surrender on such conditions as the Grantor considers appropriate.

11. What are the liabilities and who insures?

11.1 The Concessionaire agrees to use the Easement Land at the Concessionaire's own risk and releases to the full extent permitted by law the Grantor (and the Grantor's employees, agents and contractors) from all claims and demands of any kind and from all liability which may arise in respect of any accident, damage or injury occurring to any person or property in or about the Easement Land.

11.2 The Concessionaire must indemnify the Grantor against all claims, actions, losses and expenses of any nature which the Grantor may suffer or incur or for which the Grantor may become liable arising from the Concessionaire's performance of the Concession Activity.

11.3 This indemnity is to continue after the expiry or termination of this Concession in respect of any acts or omissions occurring or arising before its expiry or termination.

11.4 The Concessionaire has no responsibility or liability for costs, loss, or damage of whatsoever nature arising from any act or omission or lack of performance or any negligent or fraudulent act or omission by the Grantor, or any contractor or supplier to the Grantor, or any employee or agent of the Grantor.

11.5 Despite anything else in clause 11 the Concessionaire is not liable for any indirect or consequential damage or loss howsoever caused.

11.6 The Grantor is not liable and does not accept any responsibility for damage to or interference with the Easement Land, the Concession Activity, or to any structures, equipment or facilities on the Easement Land or any other indirect or consequential damage or loss due to any natural disaster, vandalism, sabotage, fire, or exposure to the elements except where, subject to clause 11.7, such damage or interference is caused by any wilful act or omission of the Grantor, the Grantor's employees, agents or contractors.

11.7 Where the Grantor is found to be liable in accordance with clause 11.6, the total extent of the Grantor's liability is limited to $1,000,000 in respect of the Concessionaire's structures, equipment and facilities.

11.8 Despite anything else in clause 11 the Grantor is not liable for any indirect or consequential damage or loss howsoever caused.

11.9 Without prejudice to or in any way limiting its liability under this clause 11 the Concessionaire at the Concessionaire's expense must take out and keep current policies for insurance and for the amounts not less than the sums specified in Item 10 of Schedule 1 with a substantial and reputable insurer.

11.10 After every three year period of the Term the Grantor may, on giving 10 working day's notice to the Concessionaire, alter the amounts of insurance required under clause 11.9. On receiving such notice the Concessionaire must within 10 working days take out and keep current policies for insurance and

for the amounts not less than the sums specified in that notice.

11.11 The Concessionaire must provide to the Grantor within 5 working days of the Grantor so requesting:

(a) details of any insurance policies required to be obtained under this Concession, including any renewal policies if such renewal occurs during the Term; and/or;

(b) a copy of the current certificate of such policies.

12. What about Health and Safety?

12.1 The Concessionaire must exercise the rights granted by this Concession in a safe and reliable manner and must comply with the Health and Safety at Work Act 2015 and its regulations and all other provisions or requirements of any competent authority relating to the exercise of this Concession. The Concessionaire must comply with any safety directions of the Grantor.

13. What are the compliance obligations of the Concessionaire?

13.1 The Concessionaire must comply where relevant:

(a) with the provisions of any conservation management strategy or conservation management plan under the Conservation Act 1987 or Part IIA of the Reserves Act 1977, or any general policy statement made under the Conservation Act 1987, Reserves Act 1977, National Parks Act 1980, or Wildlife Act 1953, or management plan under section 45 of the National Parks Act 1980, whichever is appropriate to the Easement Land, together with any amendment or review of any policy, strategy or plan whether approved before, on, or after the date on which this Concession takes effect; and

(b) with the Conservation Act 1987, the Reserves Act 1977, the National Parks Act 1980, Wildlife Act 1953 and any other statute, ordinance, regulation, bylaw, or other enactment (collectively the "Legislation") affecting or relating to the Easement Land or affecting or relating to the Concession Activity, including any regulations made under the Conservation Act 1987 and Wildlife Act 1953 or bylaws made under the Reserves Act 1977 or the National Parks Act 1980; and

(c) with all notices and requisitions of any competent authority affecting or relating to the Easement Land or affecting or relating to the conduct of the Concession Activity; and

(d) with all Department signs and notices placed on or affecting the Easement Land

13.2 The Concessionaire must comply with this Concession.

13.3 A breach or contravention by the Concessionaire of a relevant conservation management strategy, conservation management plan, management plan or any statement of general policy referred to in clause 13.1(a) is deemed to be a breach of this Concession.

13.4 A breach or contravention by the Concessionaire of any Legislation affecting or relating to the Easement Land or affecting or relating to the Concession Activity is deemed to be a breach of this Concession.

14. When can the Concession be terminated?

14.1 If the Concessionaire breaches any of the conditions of this Concession the Grantor may terminate this Concession at any time in respect of the whole or any part of the Easement Land. Before so terminating the Grantor must give the Concessionaire either:

(a) one calendar month's notice in writing; or

(b) such other time period which in the sole opinion of the Grantor appears reasonable and necessary;

of the Grantor's intention so to terminate this Concession. If this Concession is terminated then the Grantor, at the Grantor's sole discretion, may adjust the Concession Fee payable or refund any Concession Fee paid in advance.

14.2 The Grantor may choose to remedy at any time any default by the Concessionaire under this Concession. Where that occurs, the Concessionaire must pay forthwith on demand all reasonable costs incurred by the Grantor in remedying such default. Before electing to so remedy in accordance with this clause the Grantor must, if practicable, first give the Concessionaire notice of the default and a reasonable opportunity to remedy the default.

15. What happens on termination or expiry of the Concession?

15.1 On expiry or termination of this Concession, either as to all or part of the Easement Land, the Concessionaire is not entitled to compensation for any structures or other improvements placed or carried out by the Concessionaire on the Easement Land.

15.2 The Concessionaire may, with the Grantor's written consent, remove any specified structures and other improvements on the Easement Land. Removal under this clause must occur within the time specified by the Grantor and the Concessionaire is to make good any damage and leave the Easement Land and other public conservation land affected by the removal in a clean and tidy condition.

15.3 The Concessionaire must, if the Grantor gives written notice, remove any specified structures and other improvements on the Easement Land. Removal under this clause must occur within the time specified by the Grantor and the Concessionaire is to make good any damage and leave the Easement Land and other public conservation land affected by the removal in a clean and tidy condition and replant the Easement Land with indigenous vegetation of a similar abundance and diversity as at the commencement of the Term. If before the expiry of the Term the Concessionaire makes an application for a further concession in respect of the same Concession Activity on the Easement Land then the Grantor cannot require such removal and reinstatement until such time as that concession application has been determined. If a new concession is granted then removal and reinstatement cannot be required until the expiry or termination of the new concession.

16. When is the Grantor's consent required?

16.1 Where the Grantor's consent or approval is expressly required under this Concession then the Concessionaire must seek that approval or consent for each separate time it is required even though the Grantor may have given approval or consent for a like purpose on a prior occasion. Any such consent or approval may be made on such conditions as the Grantor considers

appropriate.

17. Are there limitations on public access and closure?

17.1 The Concessionaire acknowledges that the Easement Land is open to the public for access and that the Grantor may close public access during periods of high fire hazard or for reasons of public safety or emergency.

18. What about other concessions?

18.1 Nothing expressed or implied in this Concession is to be construed as preventing the Grantor from granting other concessions, whether similar or not, to other persons provided that the Grantor must not grant another concession that would derogate in any material way from the Concessionaire's ability to carry out the Concession Activity.

19. How will disputes be resolved?

19.1 If a dispute arises between the parties in connection with this Concession the parties must, without prejudice to any other rights or entitlements they may have, attempt to resolve the dispute by agreement using informal dispute resolution techniques such as negotiation, mediation, independent expert appraisal or any other alternative dispute resolution technique. The rules governing any such technique adopted are to be agreed between the parties.

19.2 If the dispute cannot be resolved by agreement within 14 days of written notice by one party to the other (or such further period as the parties may agree to in writing) either party may refer the dispute to the Disputes Tribunal, where relevant, or to arbitration, which arbitration is to be carried out in accordance with the provisions of the Arbitration Act 1996.

19.3 If the parties do not agree on an arbitrator within 10 working days of a party giving written notice of the requirement to appoint an arbitrator the President of the New Zealand Law Society is to appoint the arbitrator. In either case the arbitrator must not be a person who has participated in an informal dispute resolution procedure in respect of the dispute.

19.4 The arbitrator must include in the arbitration award reasons for the determination.

19.5 Despite the existence of a dispute, each party must continue to perform its obligations under this Concession.

20. How are notices sent and when are they received?

20.1 Any notice to be given under this Concession is to be in writing and made by personal delivery, by pre-paid post or email to the receiving party at the address, or email address specified in Item 11 of Schedule 1. Any such notice is to be deemed to have been received:

(a) in the case of personal delivery, on the date of delivery;

(b) in the case of post, on the 3rd working day after posting;

(c) in the case of email,

(i) if sent between the hours of 9am and 5pm on a working day, at the time of transmission; or

(ii) if subclause (i) does not apply, at 9am on the working day most immediately after the time of sending.

Provided that an email is not deemed received unless (if receipt is disputed) the party giving notice produces a printed copy of the email which evidences that the email was sent to the email address of the party given notice.

20.2 If either party's details specified in Item 11 of Schedule 1 change then the party whose details change must within 5 working days of such change provide the other party with the changed details.

21. What about the payment of costs?

21.1 The Concessionaire must pay the Grantor's legal costs and expenses of and incidental to preparing and signing this Concession or any extension or variation of it.

21.2 The Concessionaire must pay in full immediately and on demand all costs and fees (including solicitor's costs and fees of debt collecting agencies engaged by the Grantor) arising out of and associated with steps taken by the Grantor to enforce or attempt to enforce the Grantor's rights and powers under this Concession including the right to recover outstanding money owed to the Grantor.

22. What about the powers implied by statute?

22.1 The rights and powers implied in the relevant easements by Schedule 5 to the Land Transfer Regulations 2018 (as set out in Schedule 5 of this Concession) apply to this Concession **EXCEPT** to the extent set out in Schedule 3 of this Concession.

22.2 The rights and powers implied by Schedule 5 to the Property Law Act 2007 do not apply to this Concession.

23. What about Co-Siting?

23.1 In this clause "Co-Site" means the use of the Concessionaire's structures or facilities on the Easement Land by a third party for an activity; and "Co-Sitee" and "Co-Siting" have corresponding meanings.

23.2 The Concessionaire must not allow Co-Siting on the Easement Land without the prior written consent of the Grantor.

23.3 The Grantor's consent must not be unreasonably withheld but is at the Grantor's sole discretion and subject to such reasonable terms and conditions as the Grantor thinks fit including a requirement that the Co-Sitee be liable for direct payment to the Grantor of a concession fee and any environmental premium assessed in respect of the Co-Sitee's activity on the Easement Land.

23.4 In addition, the Grantor must withhold consent if:

(a) the Co-Siting would result in a substantial change to the Concession Activity on the Easement Land; or

(b) the Grantor considers the change to be detrimental to the environment of the Easement Land.

23.5 Subject to clause 23.4 the Concessionaire must, if required by the Grantor,

allow Co-Siting on the Easement Land.

23.6 Where the Concessionaire maintains that Co-Siting by a third party on the Easement Land would:

(a) detrimentally interfere physically or technically with the use by the Concessionaire of the Easement Land; or

(b) materially prejudice any resource consents obtained by the Concessionaire or cause more onerous conditions to be imposed on it by the relevant authority; or

(c) obstruct or impair the Concessionaire's ability effectively to operate from the Easement Land; or

(d) interfere with or prevent future forecast works of the Concessionaire,

the Grantor, must, as a pre-condition to consideration of an application to grant a concession to a third party, require that third party to obtain, at its own cost, a report prepared by an independent consultant acceptable to the Grantor confirming or rejecting the presence of the matters specified in this clause 23.6. The Grantor must not grant a concession to a third party where the report confirms that the proposed concession would give rise to one or more of the matters specified in this clause 23.6.

23.7 If the independent consultant report rejects the Concessionaire's concerns, the Concessionaire may dispute this in accordance with the procedure set out in clause 19 of this Schedule 2.

23.8 Where the Concessionaire is required under clause 23.5 to allow Co-Siting on the Easement Land, the Concessionaire is, subject to clause 23.10 entitled to enter into commercial agreements with third parties for them to conduct an activity on the Easement Land and to receive a reasonable fee from them for any agreed activity they intend to carry out on the Easement Land. If a dispute arises between the Concessionaire and a third party such dispute must be determined by the Grantor having regard to, but not limited to, the following matters:

(a) any written comments or submissions of the Concessionaire and third party;

(b) market value for the concession activity proposed by the third party having regard to the matters specified in Section 17Y(2) of the Conservation Act 1987;

(c) any other matters the Grantor considers relevant.

23.9 If the Concessionaire does not accept the Grantor's determination, the Concessionaire may dispute this in accordance with the procedure set out in clause 19 of this Schedule 2.

23.10 For the avoidance of doubt, a Co-Sitee permitted on the Easement Land must enter into a separate concession with the Grantor in terms of which the Co-Sitee may be required to pay to the Grantor a concession fee and environmental premium assessed in respect of the Co-Sitee's activity on the Easement Land This separate concession must not contain provisions that conflict with the Concessionaire's rights and obligations in relation to the Easement Land.

23.11 The Grantor must not authorise the third party to commence work on the Easement Land until all relevant resource consents are issued, an agreement

is executed between the Concessionaire and third party, and any conditions imposed by the Concessionaire have been met.

24. Jointly and severally liable

24.1 In the event that this Concession is held by multiple Concessionaire's, they will be jointly and severally liable.

25. Are there any Special Conditions?

25.1 Special conditions are specified in Schedule 3. If there is a conflict between this Schedule 2 and the Special Conditions in Schedule 3, the Special Conditions shall prevail.

26. The Law

26.1 This Concession is to be governed by and interpreted in accordance with the laws of New Zealand.

SCHEDULE 3

SPECIAL CONDITIONS

1. The rights and powers implied in easements under Schedule 5 of the Land Transfer Regulations 2018, apply as is relevant to the class of easement provided for in this Concession. Schedule 5 of the Regulations (excluding clauses 13 and 14) is set out in Schedule 5 of this Concession and the clauses are varied as follows:

   (a) Clause 1 is amended by adding the words "in Schedule 4" after the words "on a plan" in paragraph (a) of the interpretation of "**easement area**"

   (b) Clause 1 is amended by deleting the words "grantee and" from the interpretation of "**grantee** and **grantor**"

   (c) Schedule 5 is amended by adding a new clause 1A: "Any reference to "grantee" in this Schedule is to be read as "Concessionaire" and includes the Concessionaire's agents, employees, contractors, tenants, licensees and invitees."

   (d) Clause 11(2) is deleted and clause 11(4) is amended by deleting the reference to (2).

   (e) Clauses 13 and 14 are deleted.

If the Concessionaire wishes the easement to be registered, the Concessionaire must at its own expense:

(a) prepare an easement instrument in accordance with the Land Transfer Act 2017 and the rights and powers provided in the easement as set out in this Concession; and

(b) arrange for any necessary survey; and

(c) register the easement.

The Grantor, if satisfied the easement instrument implements this Concession, must sign the easement instrument to enable registration.

Construction conditions (pipeline)

2. Deleted.

Construction conditions (general)

3. Any vegetation removal and soil disturbance necessary to install and undertake the activity must be kept to a minimum. No native vegetation is to be disturbed without obtaining prior consent from the Grantor.

4. The surface of the ground must be reinstated in a tidy manner following the installation of the easement facility.

5. No alterations to the easement facility requiring earth disturbance must be undertaken without prior consent in writing of the Grantor.

6. Deleted.

7. Deleted.

8. Deleted.

9. Deleted.

Fuels, hazardous materials, chemicals and waste

10. Any waste or rubbish must be disposed of in an approved manner off the Easement Land at a Council approved site. Waste held on the Easement Land prior to its removal must be stored in a manner so as to ensure it does not become a contaminant or is not blown by wind or present a potential hazard to wildlife.

11. In the event of any hazardous substance spill the Concessionaire must:

    (a) Take all practicable measures to stop the flow of the substances and prevent further contamination onto the Easement Land or water;

    (b) Immediately contain, collect and remove the hazardous substances and any contaminated material, and dispose of all such material in an appropriate manner / authorised facility;

    (c) Notify the Grantor as soon as practicable;

    (d) Undertake any remedial action to restore any damage to the soil; and

    (e) Take all measures to prevent any reoccurrence.

Accidental Discovery Protocol

12. The Concessionaire must take all reasonable care to avoid any archaeological values on the Land which includes (but is not limited to) historic sites and protected New Zealand objects on the Easement Land. In the event that archaeological sites or other features with heritage values are found during any approved earth disturbance work on the Easement Land:

    (a) Work must cease immediately until further notice and advice must be sought from the Grantor;

    (b) If it is an archaeological site as defined by the Heritage New Zealand Pouhere Taonga Act 2014 then Heritage New Zealand must be contacted and its advice sought;

    (c) If it is an archaeological site relating to Māori activity then local iwi must be contacted and their advice sought;

    (d) If it is an artefact as defined by the Protected Objects Act 1975 then the Ministry for Culture and Heritage must be notified within 28 days;

    (e) If it is human remains the New Zealand Police should also be notified;

    (f) In the event of cessation of approved work because of discovery of potential historical artefact or archaeological site the Concessionaire must not recommence work until permitted to do so by the Grantor.

13. The Concessionaire must take reasonable and proper care not to damage any property of the Grantor and must promptly repair any such damage.

14. If the Concessionaire opens up the surface of the Easement Land the Concessionaire must immediately upon completion of any works restore the surface of the Easement Land as nearly as possible to its former condition to the satisfaction of the Grantor.

15. Nothing contained or implied in this Concession requires the Grantor or the Concessionaire to supply services on or under the Easement Land or entitles the Concessionaire to interfere with the services of any other user of the Easement Land.

Myrtle Rust Protocols

16. The Concessionaire must know the plants that are affected by myrtle rust and what the rust symptoms look like. This serious fungal disease only affects plants in the Myrtle (Myrtaceae) Family which includes pohutukawa, manuka, kanuka, and ramarama. See https://www.mpi.govt.nz/protection-and-response/responding/alerts/myrtle-rust/.

17. If the Concessionaire encounters suspected symptoms of myrtle rust, the Concessionaire must not touch it and must take the following steps:

    (a) Call the MPI Exotic Pest and Disease Hotline immediately on 0800 80 99 66;

    (b) Take clear photos, including the whole plant, the whole affected leaf, and a close-up of the spores/affected areas of the plant;

    (c) Don't touch or try to collect samples as this may increase the spread of the disease;

    (d) If accidental contact with the affected plant or rust occurs, bag clothing and wash clothes, bags and shoes as soon as possible.

Freshwater pests

18. The Concessionaire must comply with the Ministry for Primary Industry (MPI)'s "Check, Clean, Dry" cleaning methods to prevent the spread of didymo (*Didymosphenia geminata)* and other freshwater pests when moving between waterways. "Check, Clean, Dry" cleaning methods can be found at - www.mpi.govt.nz/travel-and-recreation/outdoor-activities/check-clean-dry/. The Concessionaire must regularly check this website and update their precautions accordingly.

Kauri Dieback

19. The Concessionaire must comply with all guidelines and notices issued by the Kauri Dieback Programme (lead by Ministry of Primary Industry) to prevent and avoid the spread of the pest organism Phytophthora taxon Agathis (PTA) Kauri Dieback Disease as specified by the website http://www.kauridieback.co.nz/. The Concessionaire must comply with the general guidelines and for specific concession activities the relevant guidelines as specified on http://www.kauridieback.co.nz/publications. The Concessionaire must update itself on these websites on a regular basis.

20. The Concessionaire must ensure that all vehicles and equipment are thoroughly cleaned of all visible soil and that footwear once cleaned is sprayed with SteriGENE (formally known as Trigene) solution before entering and when moving between areas where there are kauri. This is to reduce the potential for spread of PTA. Contact details for suppliers of SteriGENE may be obtained through the Department of Conservation.

Monitoring and compliance

21. If the Grantor determines that compliance with the conditions of this Concession or the effects of Concession Activity should be monitored, the Concessionaire shall meet: either the full costs of any monitoring programme that is implemented; or, if the Grantor determines that the costs should be apportioned among several

Concessionaires who use the same locations, part of the costs of the monitoring programme. These costs will include the Department's standard charge-out rates for staff time and the mileage rates for vehicle use associated with the monitoring programme.

SCHEDULE 4

Map

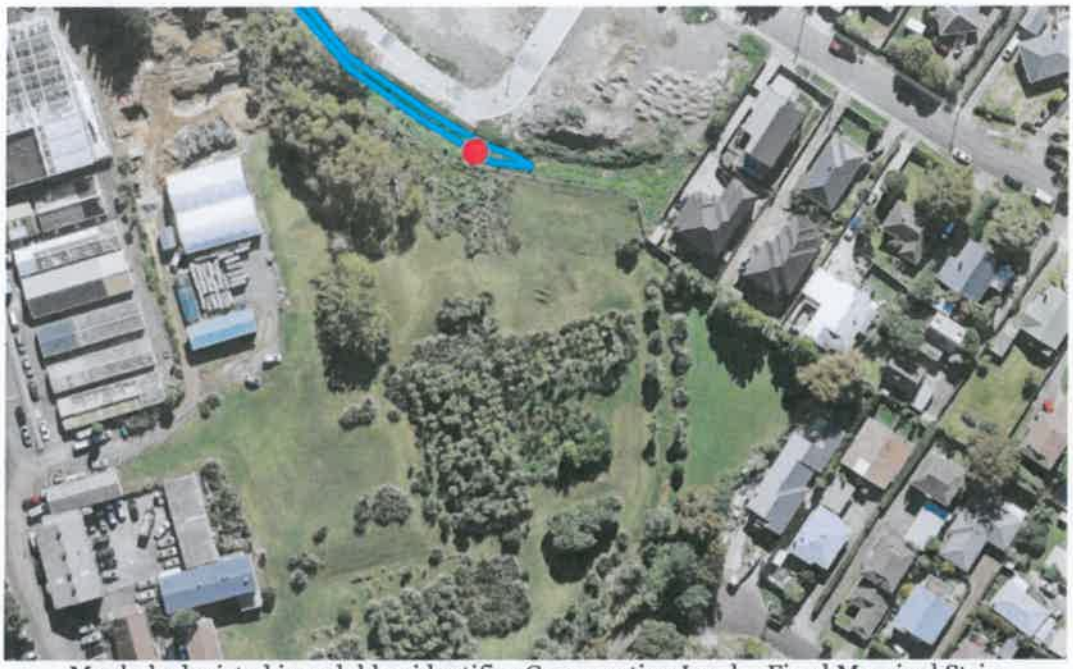

Manhole depicted in red; blue identifies Conservation Land – Fixed Marginal Strip

Schematic Diagram

SCHEDULE 5

RIGHTS AND POWERS IMPLIED IN EASEMENTS

LAND TRANSFER REGULATIONS 2018

The following are the rights and powers implied in easements as set out in Schedule 5 of the Land Transfer Regulations 2018. The Regulation Schedule applies to all classes of easement and so it is only the specific provisions which relate to the class of easement dealt with in this Concession which apply, along with those that apply to all forms of easement. This Schedule does not include clauses 13 and 14 of Schedule 5 of the Regulations as they are deleted and replaced by the specific default and dispute provisions of the Concession. Refer to Schedule 3 of the Concession for changes to these implied rights and powers.

1 Interpretation

In this schedule, unless the context otherwise requires,—

benefited land, in relation to an easement that benefits land, means the land that takes the benefit of the easement and that is described by reference to the register in the relevant easement instrument, transfer instrument, or deposit document

burdened land, in relation to an easement,—

(a) means the land over which the easement in registered and that is described by reference to the register in the relevant easement instrument, transfer instrument, or deposit document; and

(b) includes the easement area

easement area, in relation to an easement, means an area that—

(a) is shown on a plan and map in Schedule 4; and

(b) is referred to in the relevant easement instrument, transfer instrument, or deposit document as the area to which the easement applies

easement facility,—

(a) for a right to convey water, means pipes, pumps, pump sheds, storage tanks, water purifying equipment, other equipment suitable for that purpose (whether above or under the ground), and anything in replacement or substitution:

(b) for a right to convey electricity or a right to convey telecommunications, means wires, cables (containing wire or other media conducting materials), ducts, surface boxes, towers, poles, transformers, switching gear, other equipment suitable for that purpose (whether above or under the ground), and anything in replacement or substitution:

(c) for a right of way, means the surface of the land described as the easement area, including any driveway:

(d) for a right to drain water, means pipes, conduits, open drains, pumps, tanks (with or without headwalls), manholes, valves, surface boxes, other equipment suitable for that purpose (whether above or under the ground), and anything in replacement or substitution:

(e) for a right to drain sewage, means pipes, conduits, pumps, tanks (with or without headwalls), manholes, valves, surface boxes, other equipment suitable for that purpose (whether above or under the ground), and anything in replacement or substitution:

(f) for a right to convey gas, means pipes, conduits, valves, other equipment suitable for that purpose (whether above or under the ground), and anything in replacement or substitution

grantor—

(a) has the meanings given by section 107 of the Act; and

(b) in clauses 3 to 9 and 12(1), include those persons' agents, employees, contractors, tenants, licensees, and invitees

repair and maintenance, in relation to an easement facility, includes the replacement of the easement facility

telecommunication means the conveyance by electromagnetic means from one device to another of any encrypted or non-encrypted sign, signal, impulse, writing, image, sound, instruction, information, or intelligence of any nature, whether for the information of any person using the device or not.

1A. Any reference to "grantee" in this Schedule is to be read as "Concessionaire" and includes the concessionaire's agents, employees, contractors, tenants, licensees, and invitees.

2 Classes of easements

For the purposes of regulation 21, easements are classified by reference to the following rights:

(a) a right to convey water:
(b) a right to drain water:
(c) a right to drain sewage:
(d) a right of way:
(e) a right to convey electricity:
(f) a right to convey telecommunications:
(g) a right to convey gas.

Rights and powers implied in easements granting certain rights

3 Right to convey water

Deleted.

4 Right to drain water

(1) A right to drain water includes the right for the grantee, in common with the grantor and other persons to whom the grantor may grant similar rights, at all times, to convey water (whether sourced from rain, springs, soakage, or seepage) in any quantity—

(a) from the benefited land through the easement facility and over the easement area; or

(b) for an easement in gross, through the easement facility and over the easement area.

(2) The right to drain water is limited to the extent required by any period of necessary cleansing, renewal, modification, or repair of the easement facility.

(3) The easement facility for the relevant easement is the easement facility laid or to be laid along the easement area in accordance with clause 10(1).

5 Right to drain sewage

(1) A right to drain sewage includes the right for the grantee, in common with the grantor and other persons to whom the grantor may grant similar rights, at all times, to drain, discharge, and convey sewage and other waste material and waste fluids in any quantity—

(a) from the benefited land through the easement facility and over the easement area; or

(b) for an easement in gross, through the easement facility and over the easement area.

(2) The right to drain, discharge, and convey sewage and other waste material and waste fluids is limited to the extent required by any period of necessary cleansing, renewal, modification, or repair of the easement facility.

(3) The easement facility for the relevant easement is the easement facility laid or to be laid along the easement area in accordance with clause 10(1).

6 Rights of way

Deleted.

7 Right to convey electricity

Deleted.

8 Right to convey telecommunications

Deleted.

9 Right to convey gas

Deleted.

Rights and powers implied in all classes of easement

10 General rights

(1) All the easements referred to in this schedule include—

(a) the right to use any easement facility already situated in the easement area for the purpose of the easement granted; and

(b) if no suitable easement facility exists in the easement area, the right to lay, install, and construct in the easement area (including the right to

excavate land for the purpose of that construction) an easement facility that the grantee reasonably requires and for which the grantor has given prior consent; and

(c) the right to repair and maintain the easement facility.

(2) The grantor must not unreasonably withhold consent under subclause (1)(b).

(3) The grantor must not do and must not allow to be done on the burdened land anything that may interfere with or restrict the rights of any other party or interfere with the efficient operation of the easement facility.

(4) The grantee must not do and must not allow to be done on the benefited land (if any) or the burdened land anything that may interfere with or restrict the rights of any other party or interfere with the efficient operation of the easement facility.

(5) To avoid doubt, all the easements referred to in this schedule (other than for a right to convey electricity) include the right to convey electricity necessary to operate a pump or other equipment that is part of the easement facility.

11 Repair, maintenance, and costs

(1) If the 1 or more grantees have exclusive use of the easement facility, each grantee is responsible for arranging the repair and maintenance of the easement facility, and for the associated costs, so as to keep the facility in good order and to prevent it from becoming a danger or nuisance.

(2) Deleted.

(3) If the easement is in gross, the grantee bears the cost of all work done outside the burdened land.

(4) The parties responsible for maintenance under subclause (1), ~~(2),~~ or (5) (as the case may be) must meet any associated requirements of the relevant local authority.

(5) Any repair or maintenance of the easement facility that is attributable solely to an act or omission by the grantor or the grantee must be promptly carried out by that grantor or grantee at their sole cost.

(6) However, if the repair and maintenance of the easement facility is only partly attributable to an act or omission by the grantor or grantee,—

(a) that party must pay the portion of the costs of the repair and maintenance that is attributable to that act or omission; and

(b) the balance of those costs is payable in accordance with subclause (2).

(7) The costs of any electricity used for the conveyance of water must be apportioned between users of the water in proportion to their usage of the water.

12 Rights of entry

(1) The grantee may, for the purpose of exercising any right or power, or performing any related duty, implied in an easement by these regulations,—

(a) enter upon the burdened land by a reasonable route and with all necessary tools, vehicles, and equipment; and

(b) remain on the burdened land for a reasonable time for the sole purpose of completing the necessary work; and

(c) leave any vehicles or equipment on the burdened land for a reasonable time if work is proceeding.

(2) However, the grantee must first give reasonable notice to the grantor.

(3) The grantee must ensure that as little damage or disturbance as possible is caused to the burdened land or to the grantor.

(4) The grantee must ensure that all work is performed properly.

(5) The grantee must ensure that all work is completed promptly.

(6) The grantee must immediately make good any damage done to the burdened land by restoring the surface of the land as nearly as possible to its former condition.

(7) The grantee must compensate the grantor for all damage caused by the work to any crop (whether ready for harvest or not) or to any buildings, erections, or fences on the burdened land.

13 Default

Deleted.

14 Disputes

Deleted.

Appendix E: License Agreement Plan

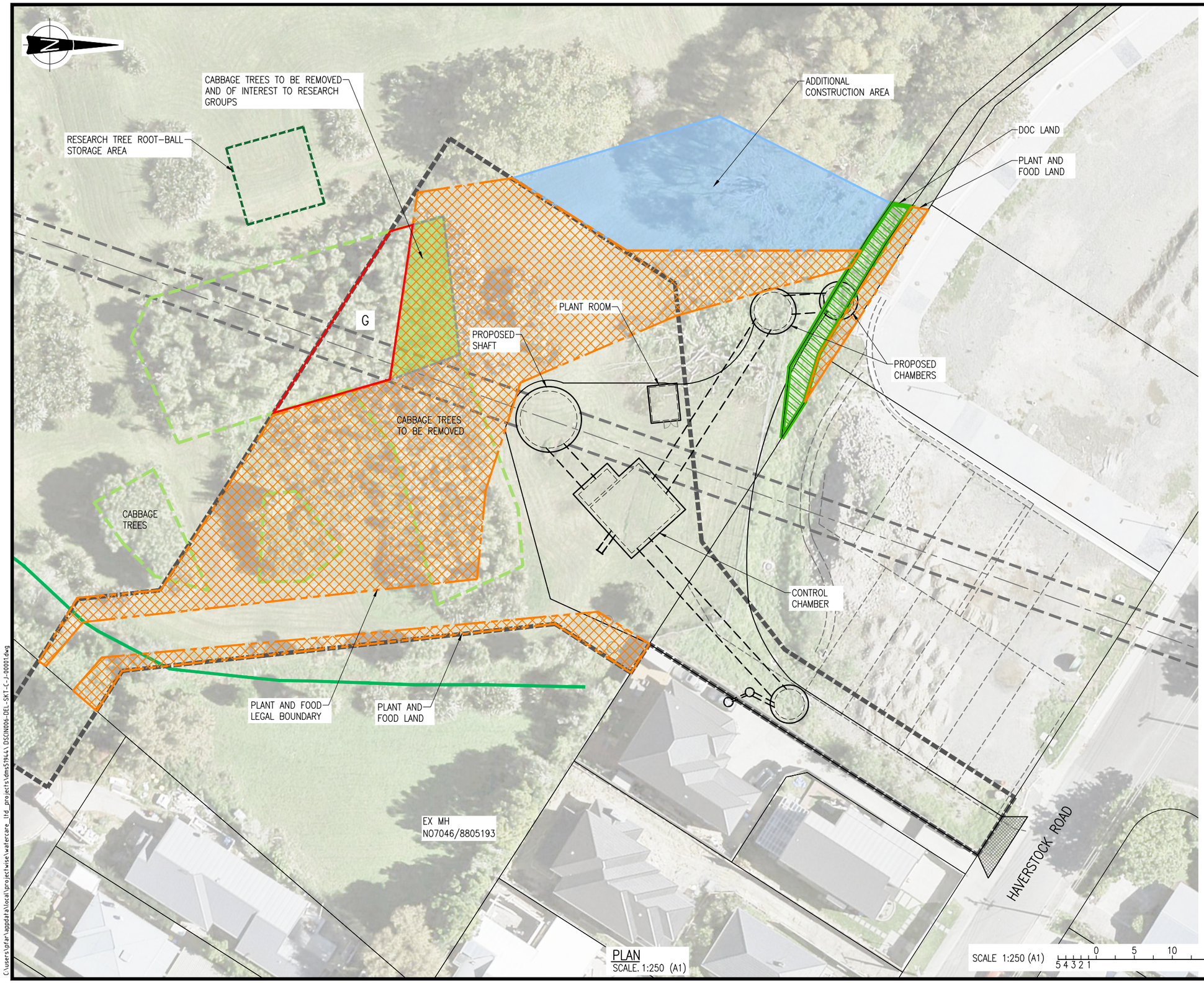

PLAN
SCALE. 1:250 (A1)

SCALE 1:250 (A1) 0 5 10 15 20 25m
5 4 3 2 1

NOTES:

1. CO-ORDINATES ARE IN NZTM AND LEVELS ARE TO AUCKLAND L&S 1946 DATUM.
2. LOCATION OF EXISTING SERVICES HAVE BEEN EXTRACTED FROM AUCKLAND COUNCIL GIS AND UTILITIES PLANS AND ARE INDICATIVE. PHYSICAL LOCATION OF AFFECTED SERVICES WILL BE REQUIRED PRIOR TO CONSTRUCTION.
3. TREES TO BE PROTECTED. PRUNING TO BE CARRIED OUT UNDER THE SUPERVISION OF AN APPROVED ARBORIST TO FACILITATE CONSTRUCTION IF REQUIRED.

LEGEND

- DESIGNATION BOUNDARY
- LICENCE AREA
- ADDITIONAL CONSTRUCTION AREA
- DEPARTMENT OF CONSERVATION WORKS AREA
- TREE REMOVAL AREA
- PROPOSED MAIN TUNNEL
- PROPOSED LINK SEWER
- PROPOSED SEWERAGE
- EXISTING STORMWATER STREAM
- PROPOSED VEHICLE CROSSING

AREA

- 2067m² LICENCE AREA
- 554m² ADDITIONAL CONSTRUCTION AREA
- 177m² AREA G

ISSUED FOR INFORMATION

JACOBS AECOM McMILLEN JACOBS ASSOCIATES

C:\users\plan\appdata\local\projectwise\watercare_ltd_projects\dms51944\DSCIN006-DEL-SKT-C-J-00001.dwg

Plot Date: Jun 14, 2021 - 14:9pm

ISSUE	DATE	AMENDMENT
B	14.06.21	RE-ISSUED FOR INFORMATION
A	21.09.20	RE-ISSUED FOR INFORMATION
1	27.04.21	ISSUED FOR INFORMATION

Watercare

COPYRIGHT – This drawing, the design concept, remain the exclusive property of Watercare Services Limited and may not be used without approval. Copyright reserved.

HAVERSTOCK RD – CENTRAL INTERCEPTOR (DSCIN)
00 SITE GENERAL
ALTERNATE SITE BOUNDARY LAYOUT PLAN

CAD FILE DSCIN006-DEL-SKT-C-J-00001.DWG
REF No. 2011808.024
ORIGINAL SCALE A1 1:250
SKETCH No. DSCIN006-DEL-SKT-C-J-00001
ISSUE B

www.tonkintaylor.co.nz